Old Machine Shop – Edison's lab

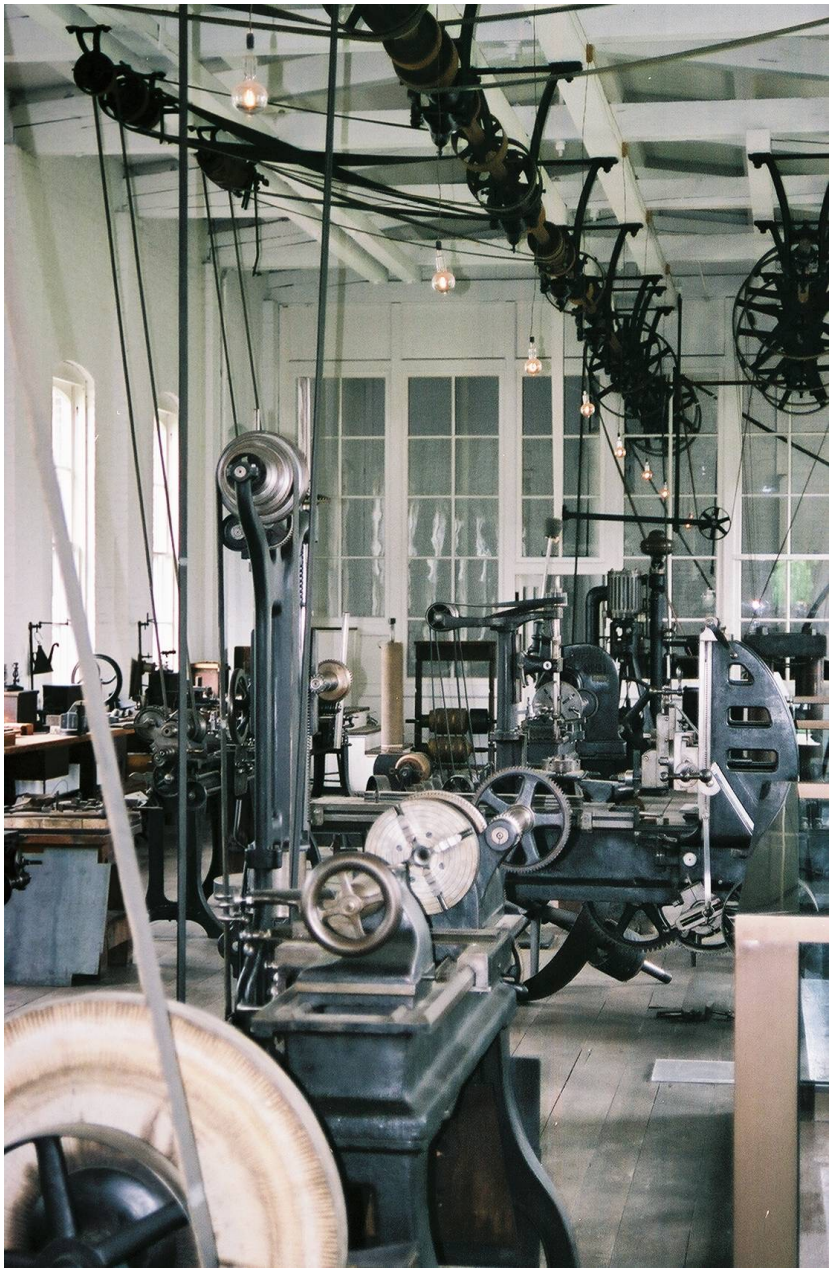

Machining = Chip formation by a tool

Big lathe with big chips

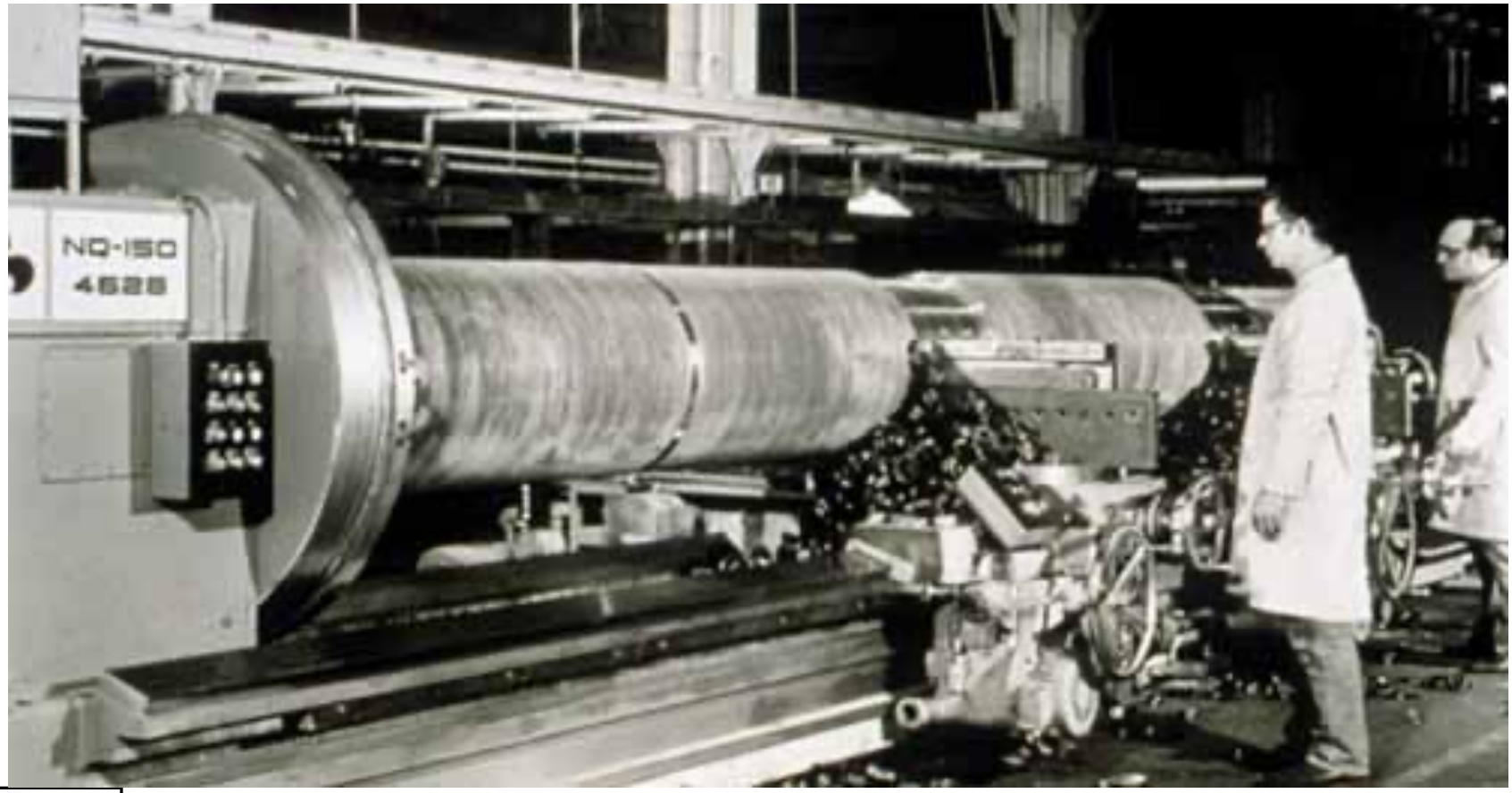

Giant Lathe

Discontinuous chips

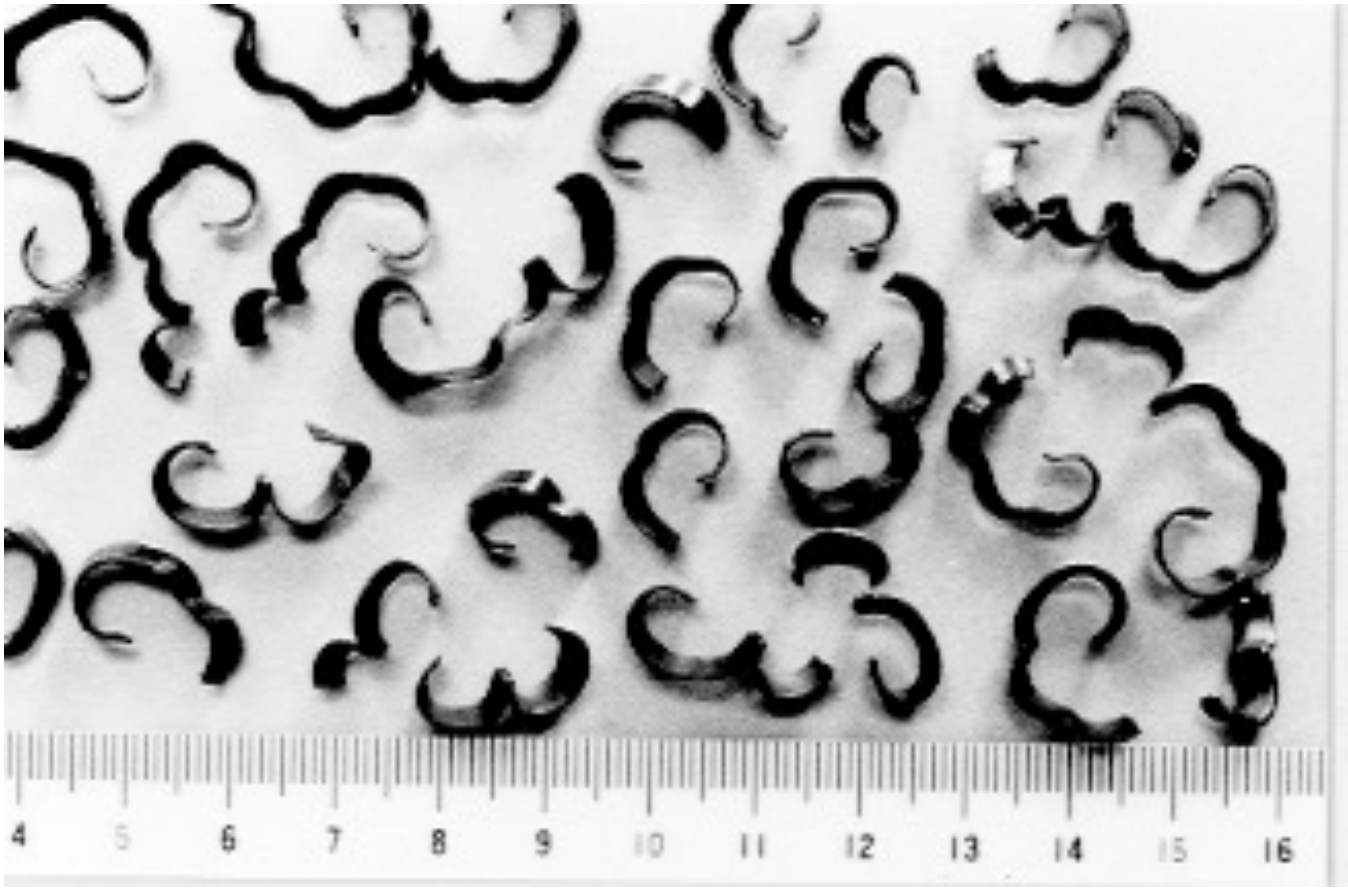

Continuous chips

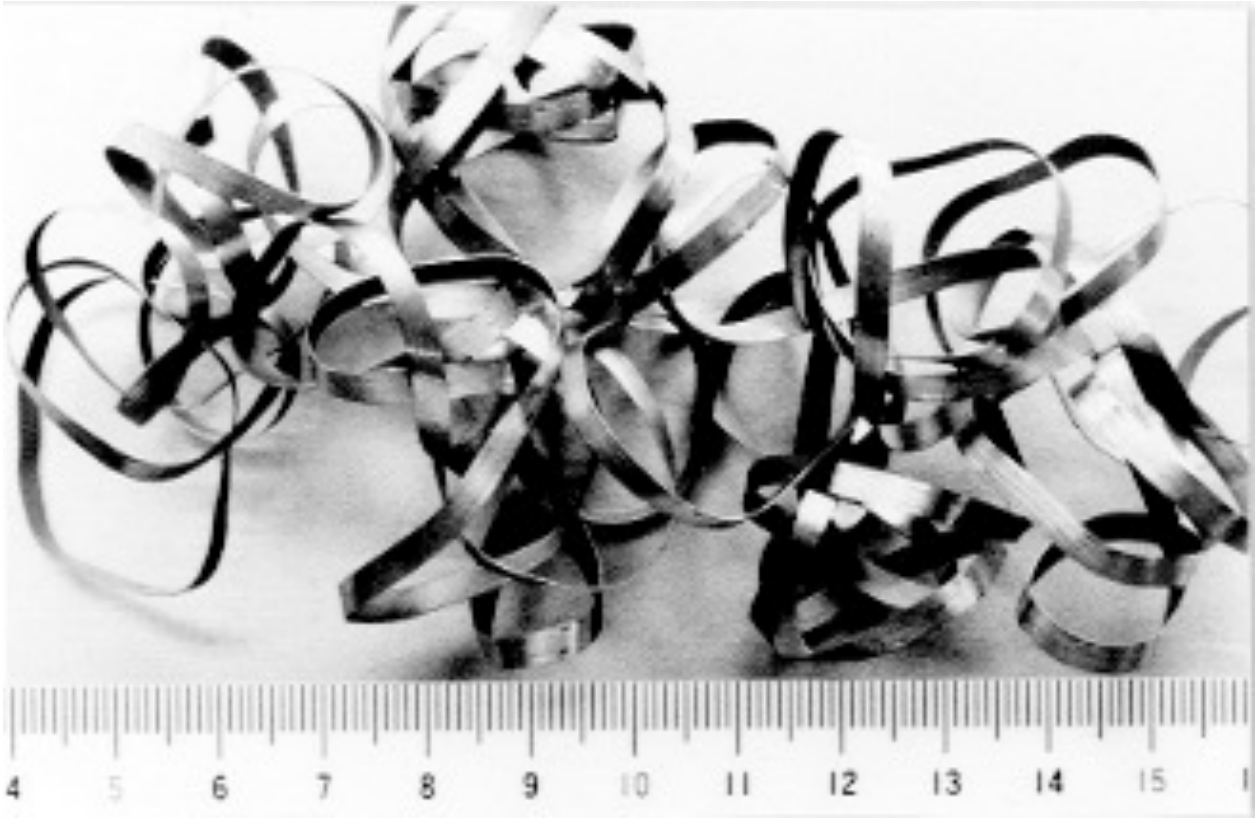

Machine Tools and Processes

- Turning
- Boring
- Milling
- Planing
- Shaping
- Broaching
- Drilling
- Filing
- Sawing
- Grinding
- Reaming
- Honing
- Tapping

Classification of Conventional Machining

- Cutting processes
  - Single point: e.g. shaping, planing, turning, boring, etc.
  - Multiple point: e.g. milling, drilling, etc.
- Abrasive processes
  - Grinding, honing, etc.

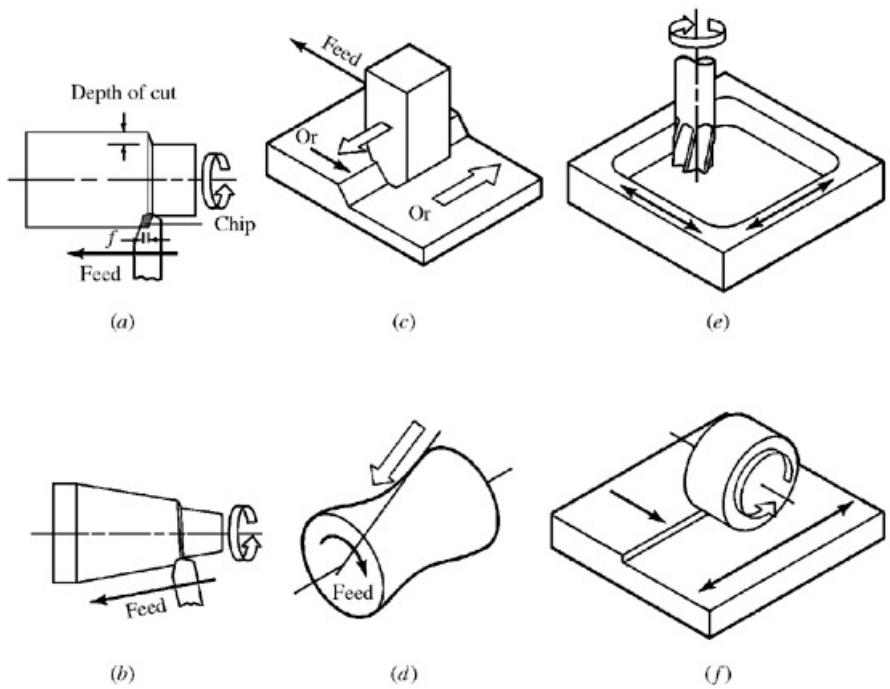

Lathe (for turning)

Lathe Parts

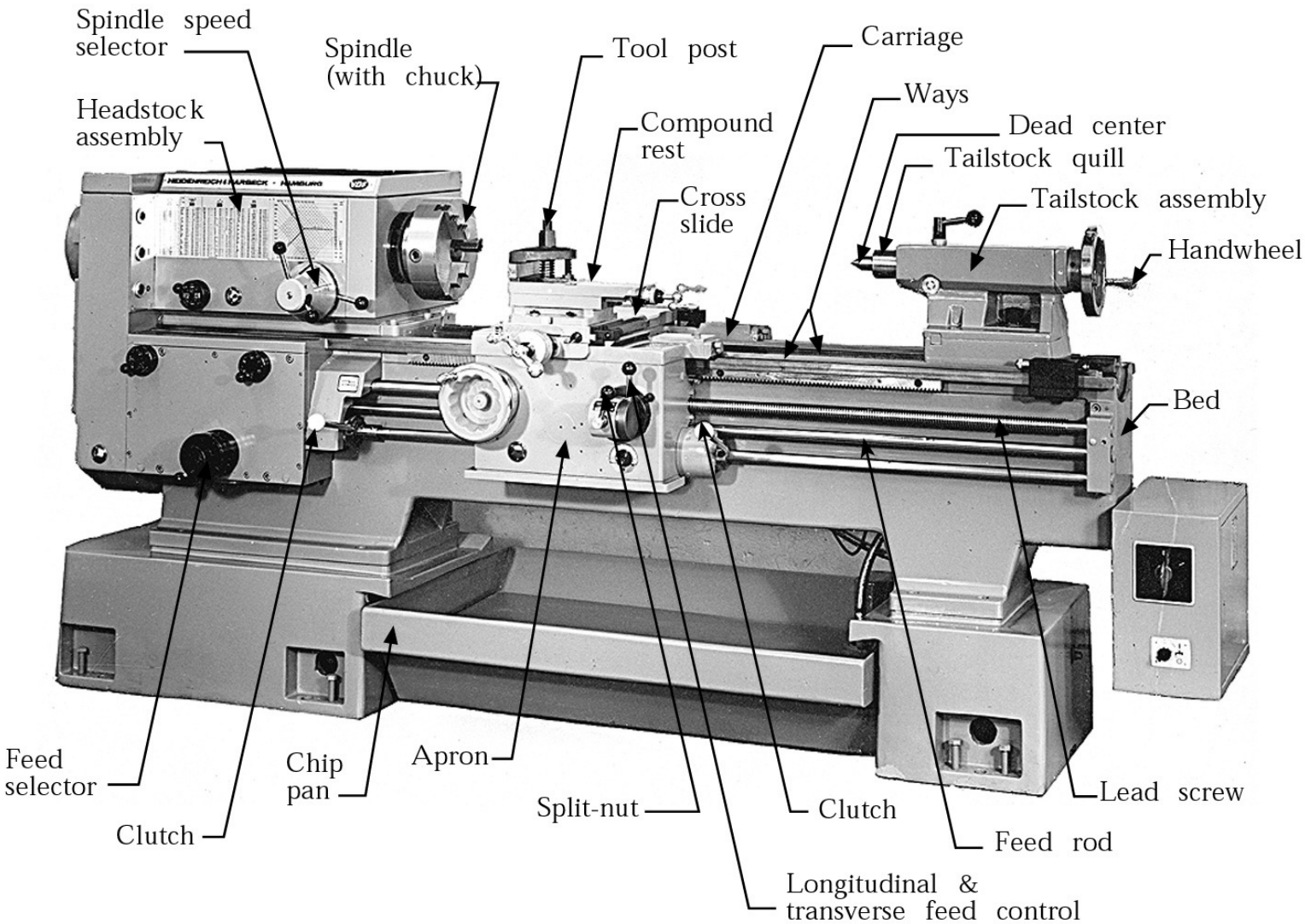
Spindle speed selector
Headstock assembly
Spindle (with chuck)
Tool post
Compound rest
Cross slide
Carriage
Ways
Dead center
Tailstock quill
Tailstock assembly
Handwheel
Bed
Feed selector
Clutch
Chip pan
Apron
Split-nut
Clutch
Feed rod
Lead screw
Longitudinal & transverse feed control

Typical Insert Cutting Tool

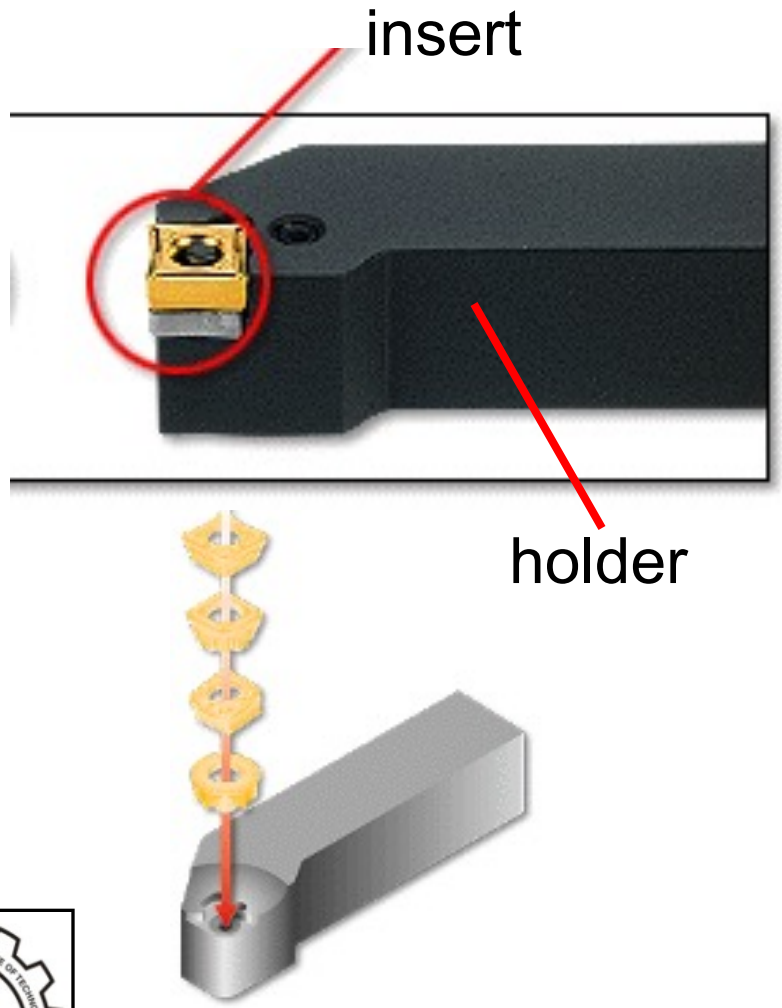

Pillars made on Lathe

Old Lathe

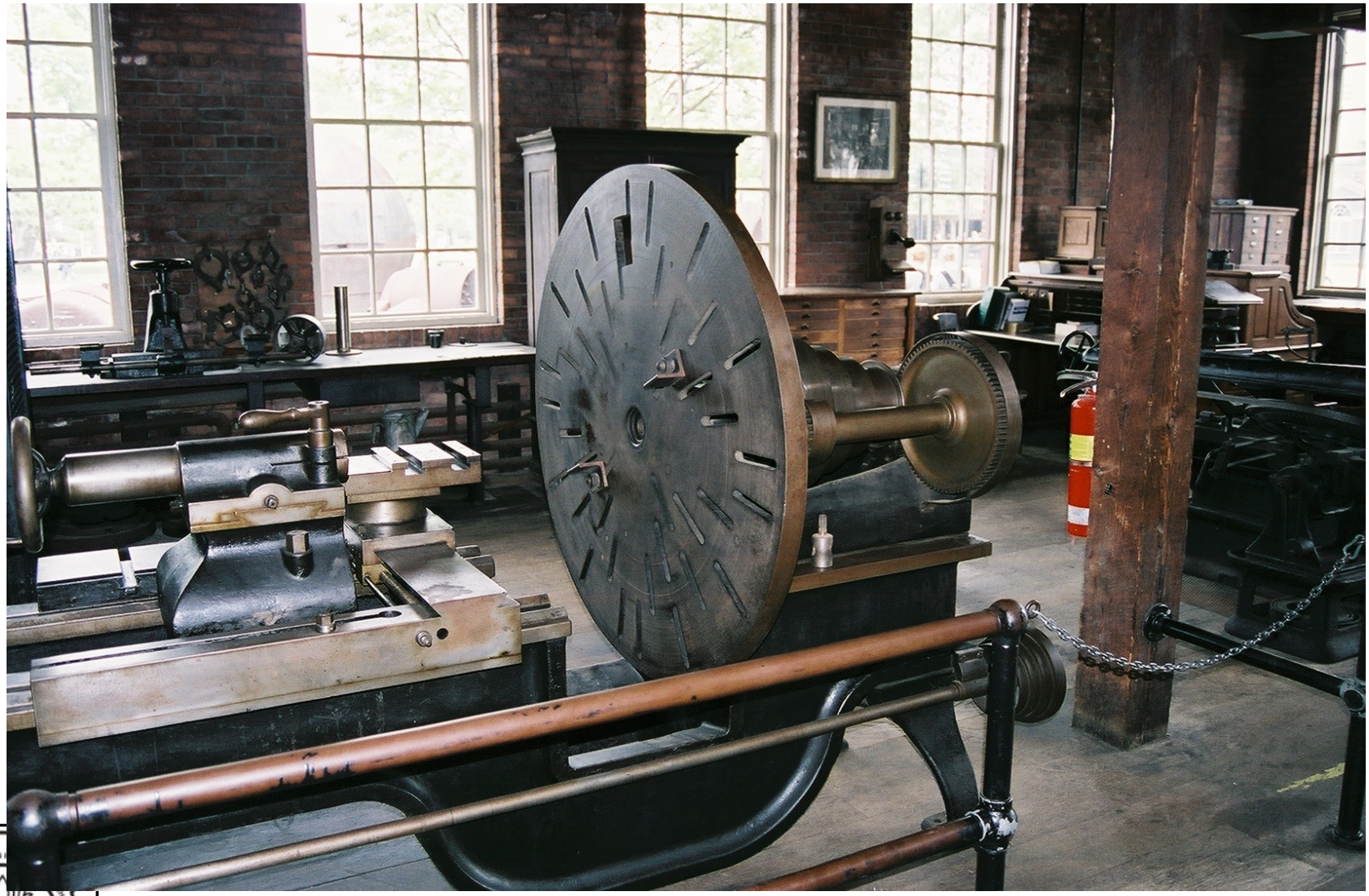

(a) Straight turning

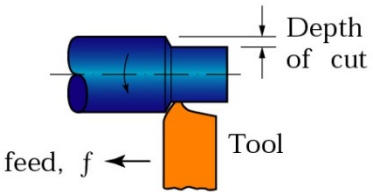

(b) Taper turning

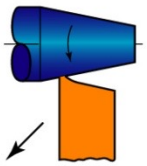

(c) Profiling

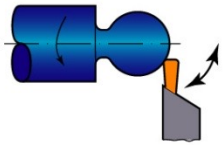

(d) Turning and external grooving

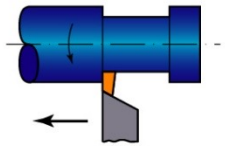

(e) Facing

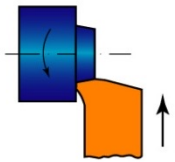

(f) Face grooving

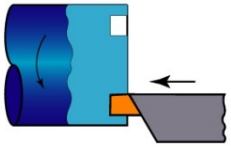

(g) Cutting with a form tool

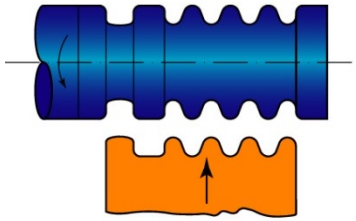

(h) Boring and internal grooving

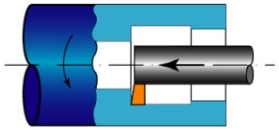

(i) Drilling

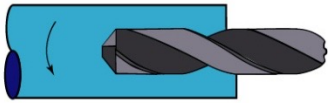

(j) Cutting off

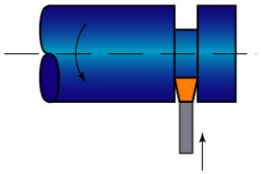

(k) Threading

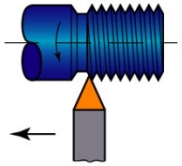

(l) Knurling

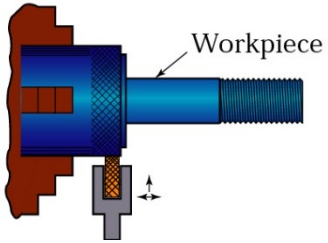

Boring

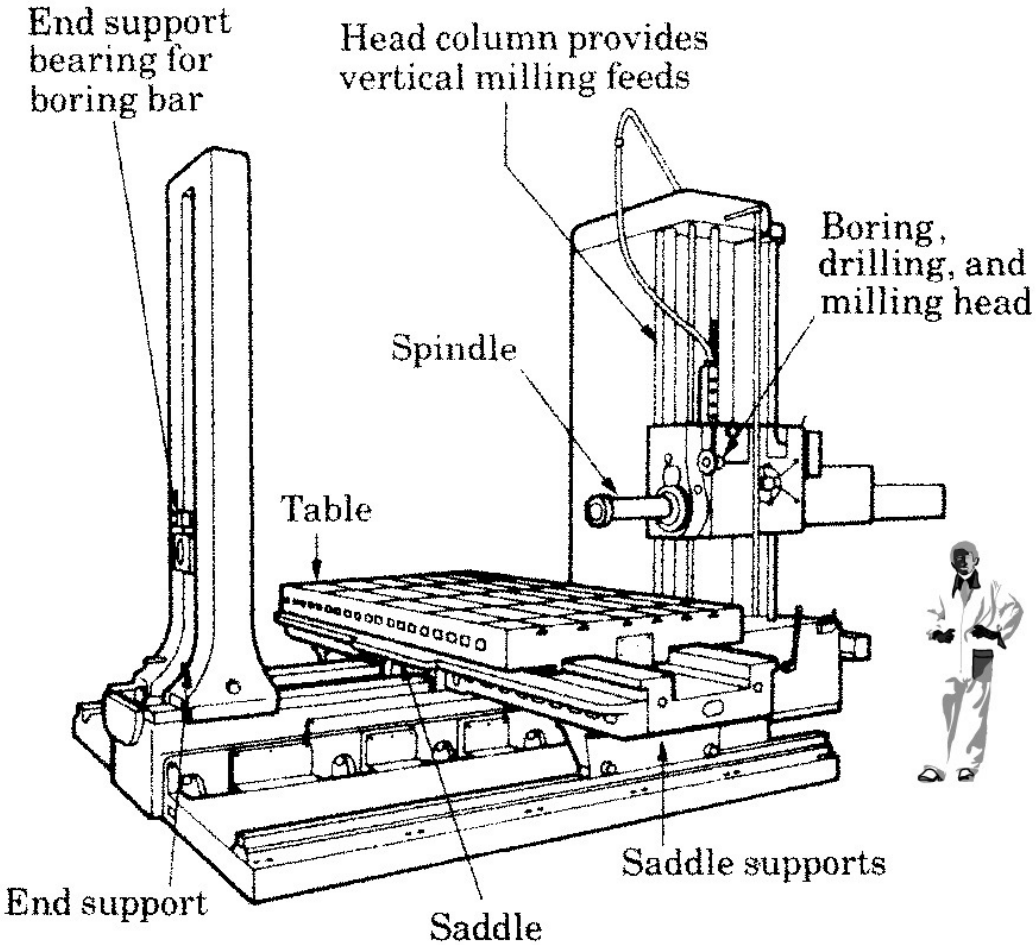
End support bearing for boring bar
Head column provides vertical milling feeds
Boring, drilling, and milling head
Spindle
Table
End support
Saddle
Saddle supports

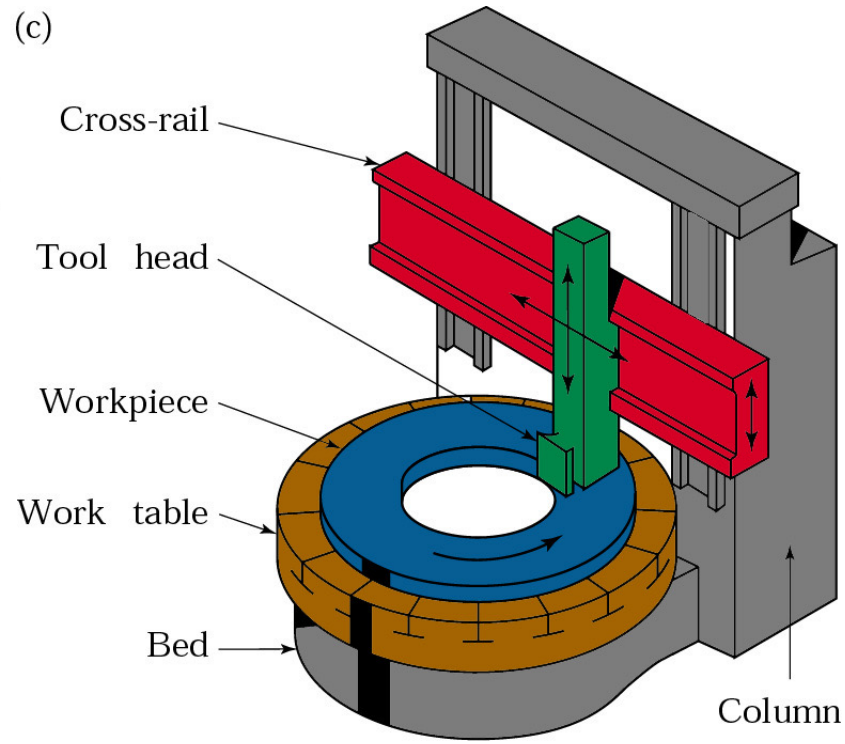
(c)
Cross-rail
Tool head
Workpiece
Work table
Bed
Column

Old Boring Machine

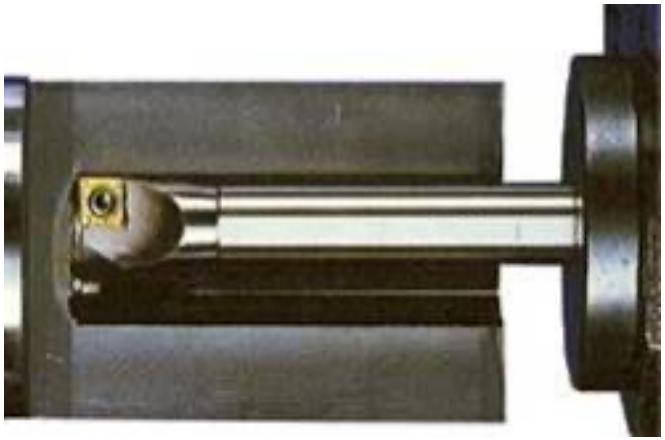

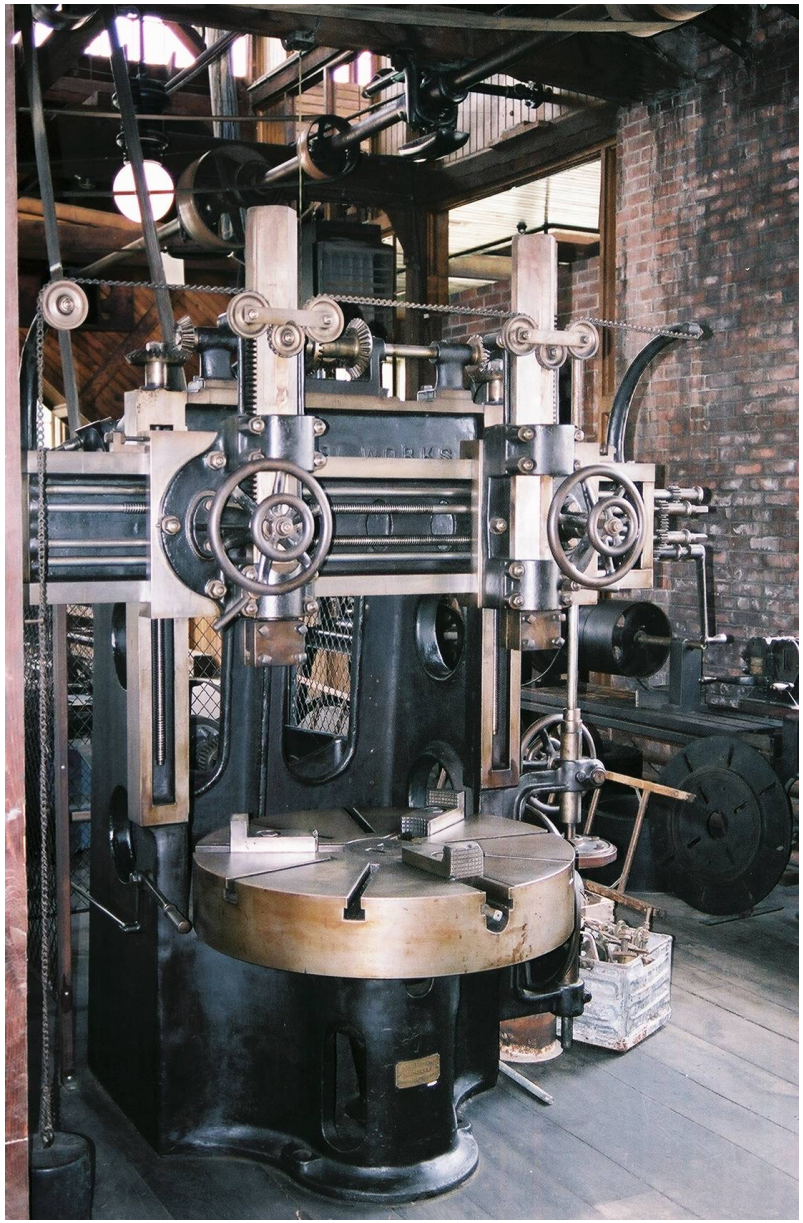

Old Planer

Shaper

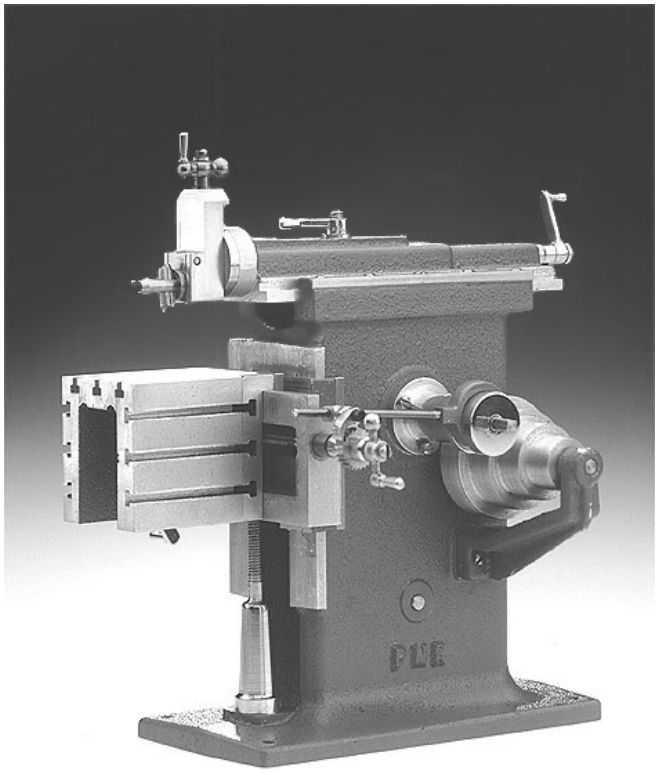

© Copyright 2000-2001 PM Research Inc. All Rights Reserved

Trepanning

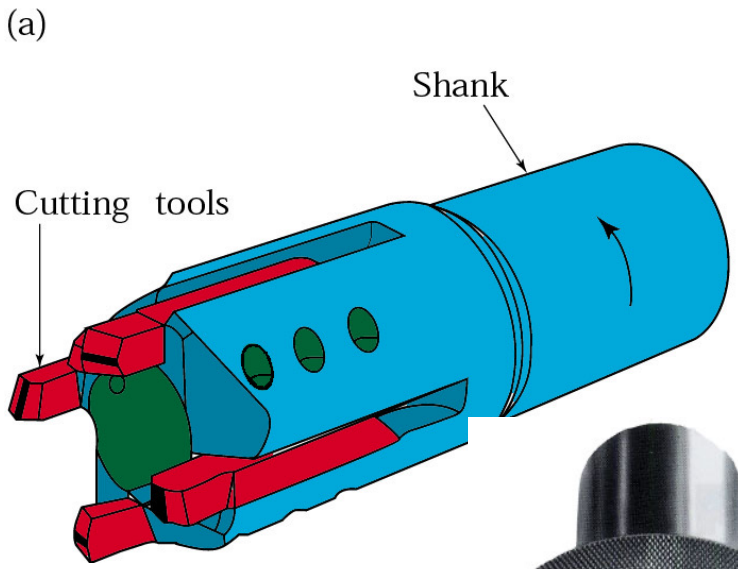

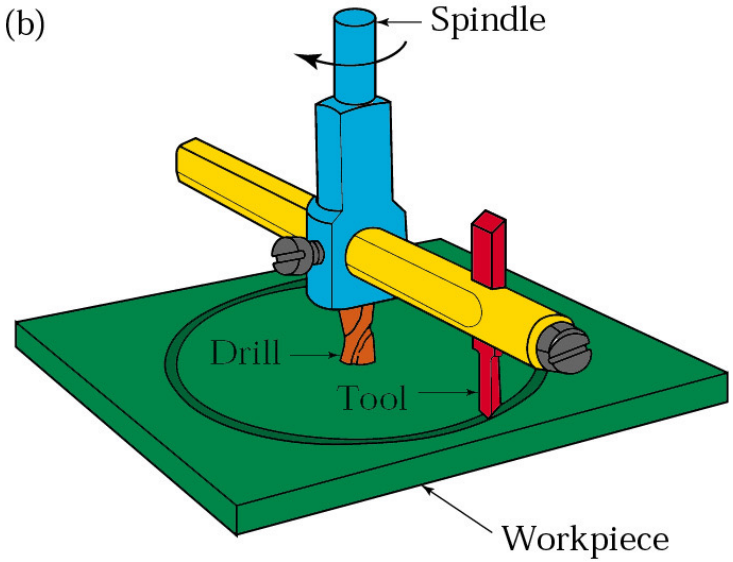

Drilling

Clarke
METALWORKER

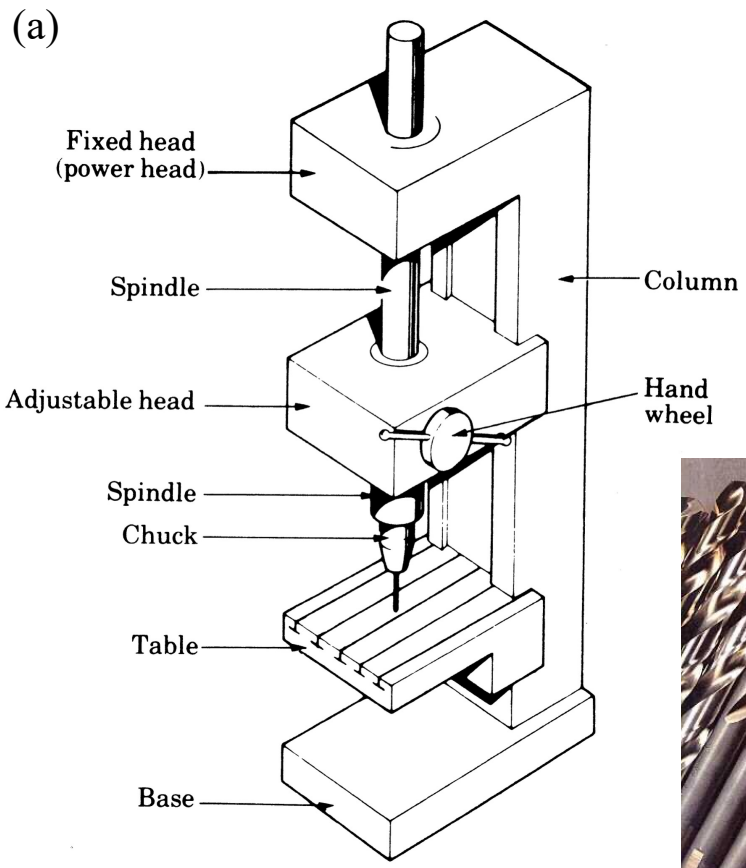
(a)
Fixed head
(power head)
Spindle
Column
Adjustable head
Hand
wheel
Spindle
Chuck
Table
Base

DRILL BITS

Milling

(a) Slab milling (b) Face milling (c) End milling

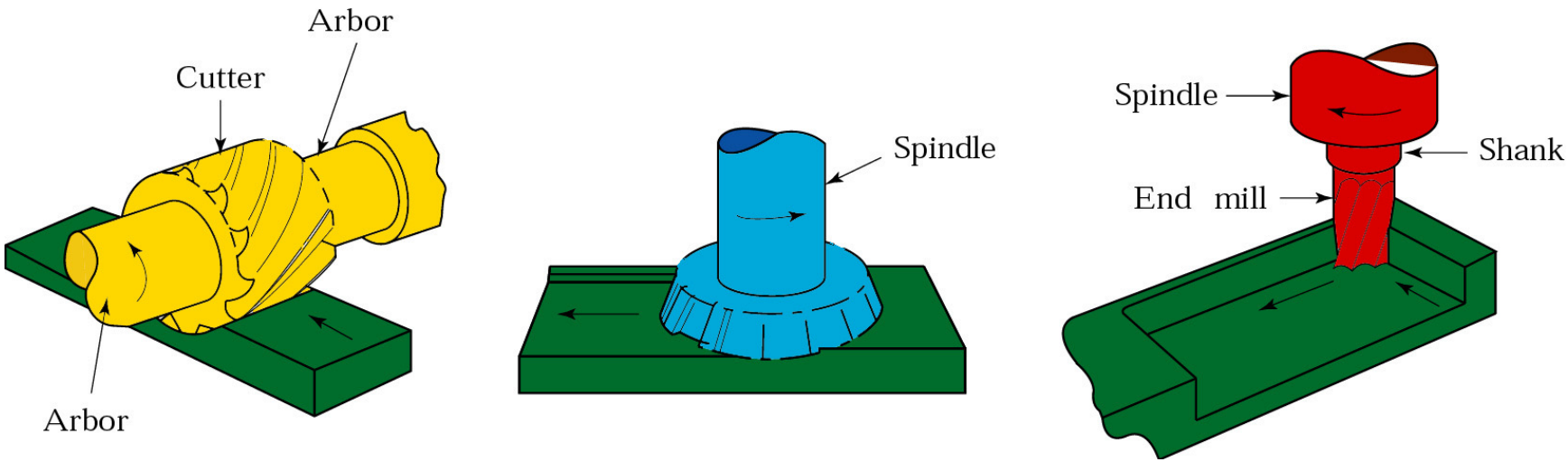

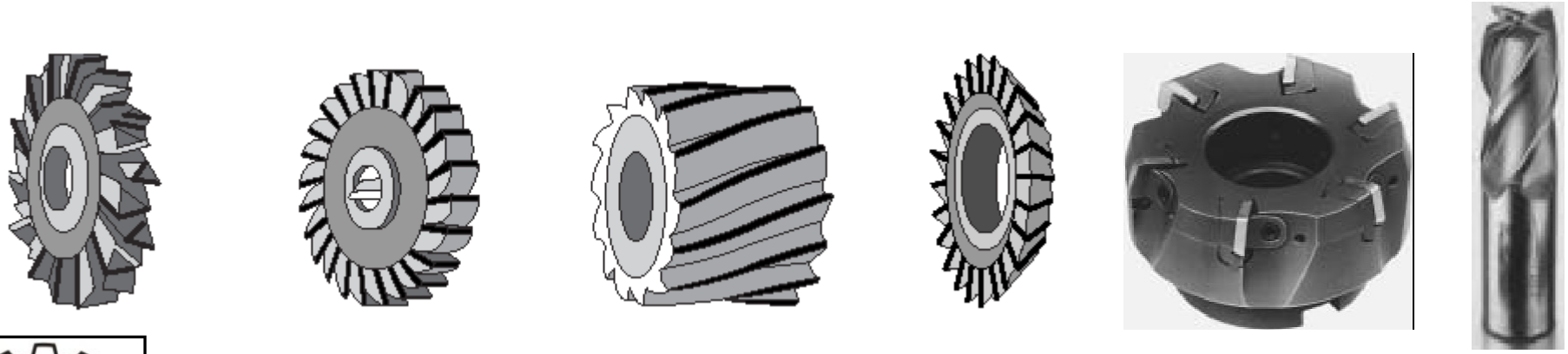

Common HSS milling cutters.

Face Milling

Horizontal Mill

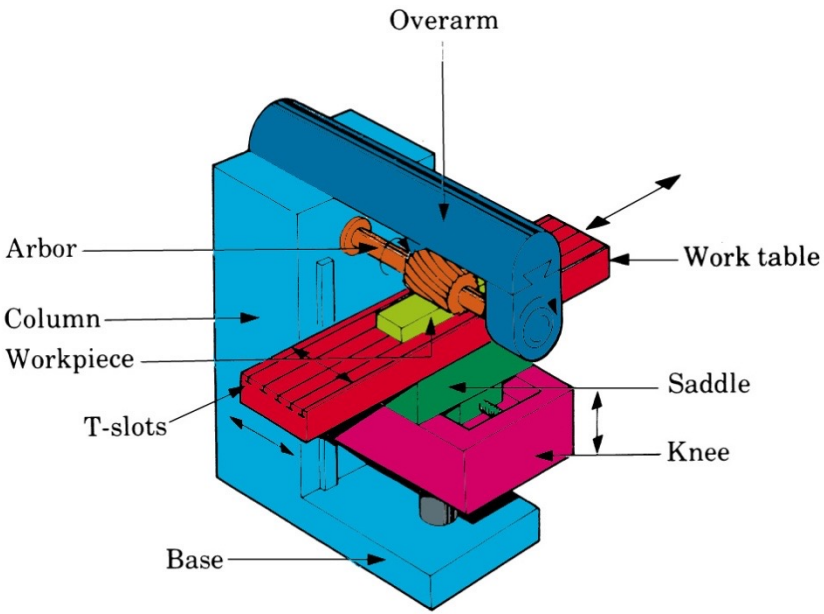

Old Horizontal Mill

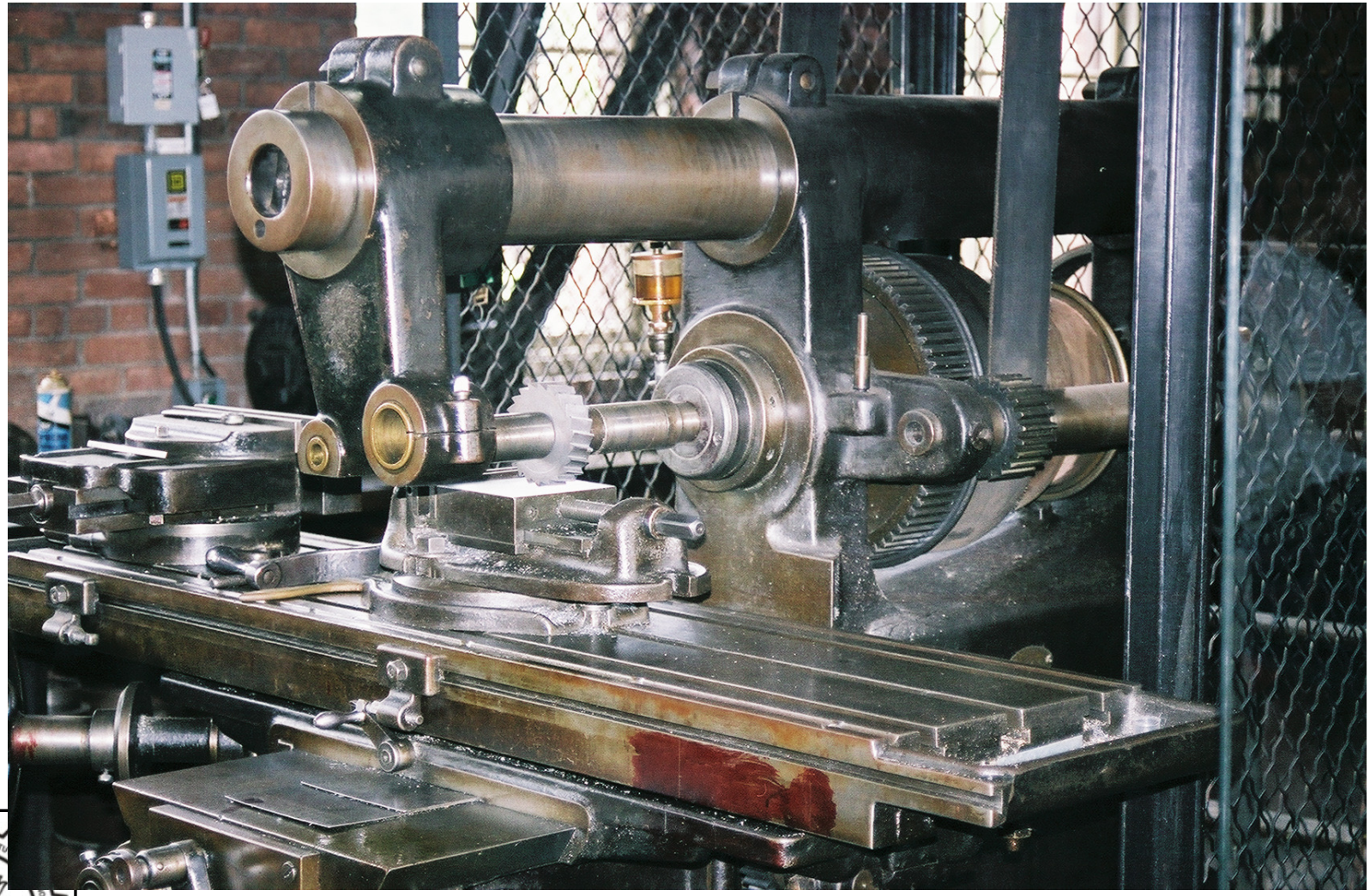

Vertical Mill

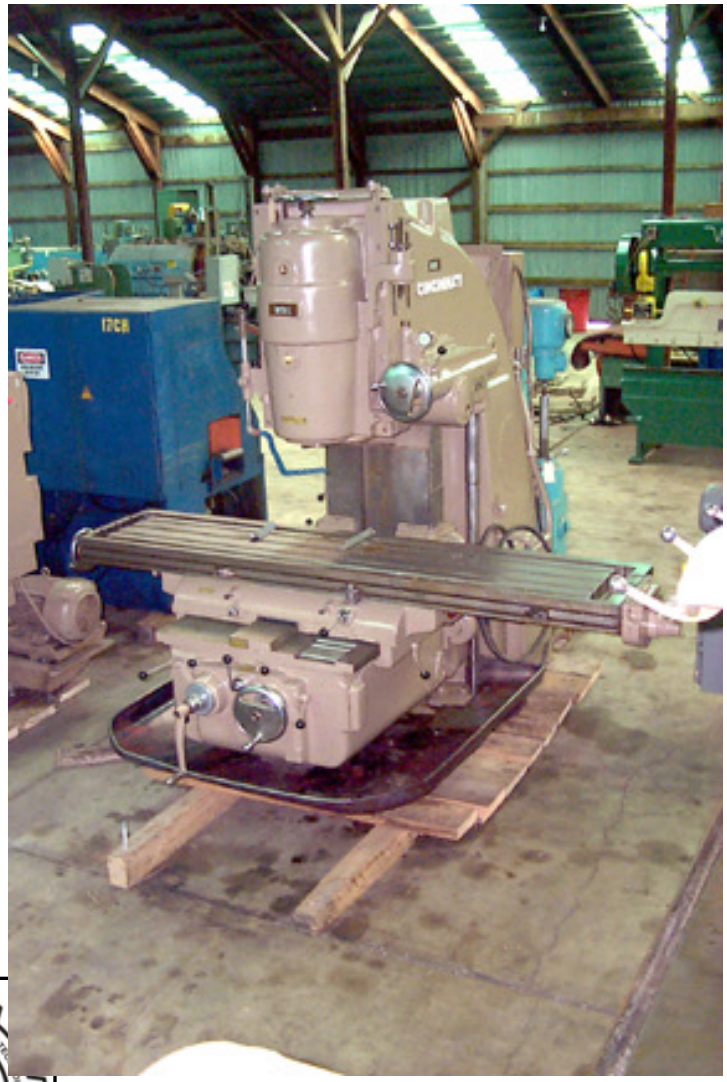

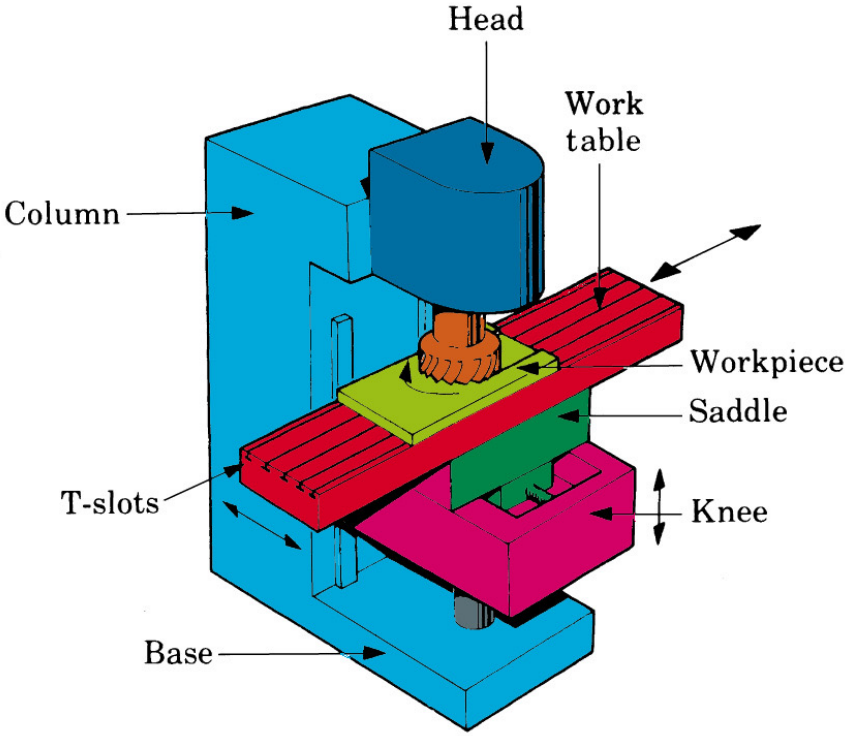

Milling Types

(a) Straddle milling

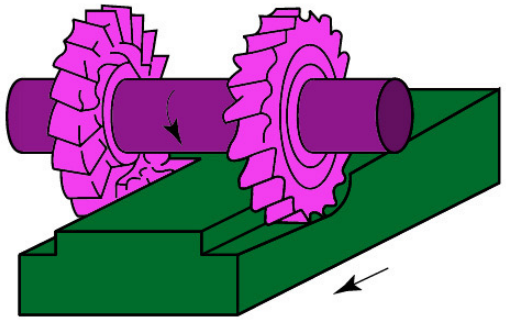

(b) Form milling

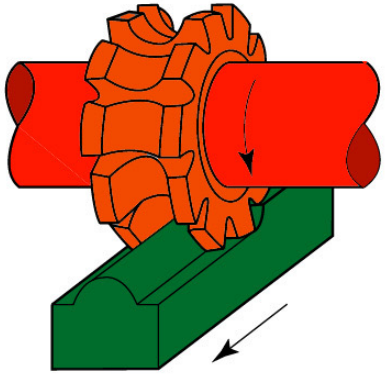

(c) Slotting

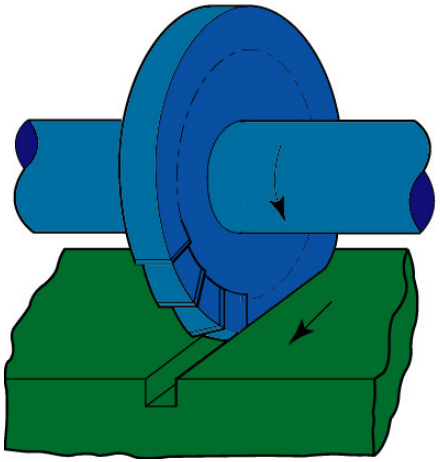

(d) Slitting

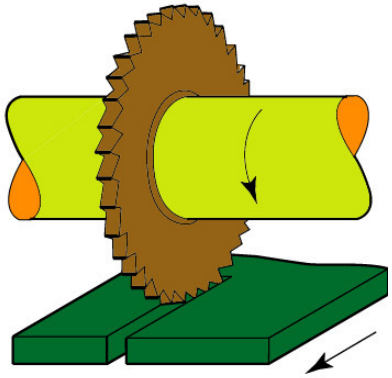

Ultra High-speed Micromachining Center

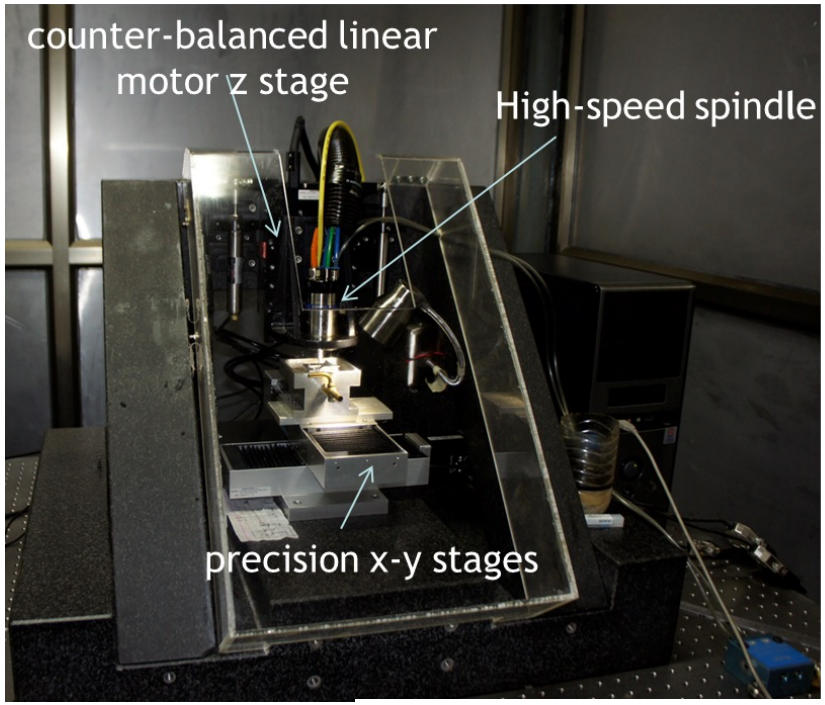

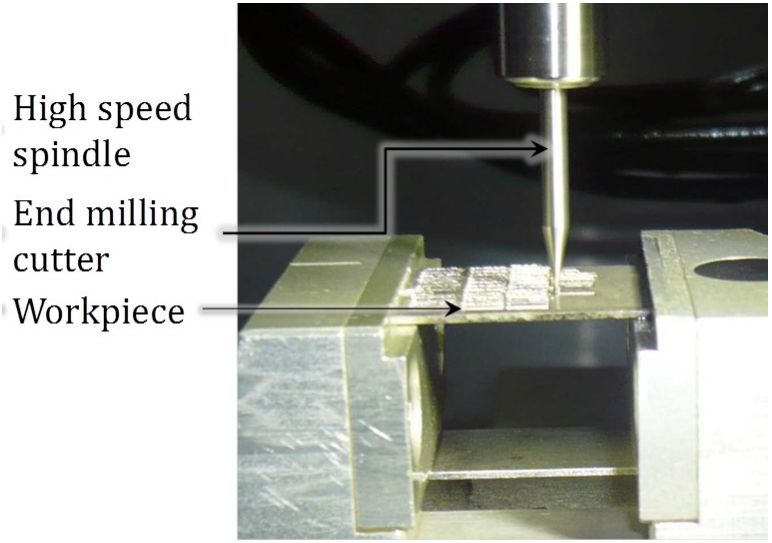

- Pneumatically counterbalanced linear motor stage z stage: 5 nm resolution/±10 nm accuracy
- Precision ball screw X-Y stages: 0.5 μm resolution/±1 μm accuracy; linear motor z stage
- Ceramic bearing electric spindle speed up to 140,000 rpm
- Torque 5.6 N-cm and 800 W

3-D Feature Creation

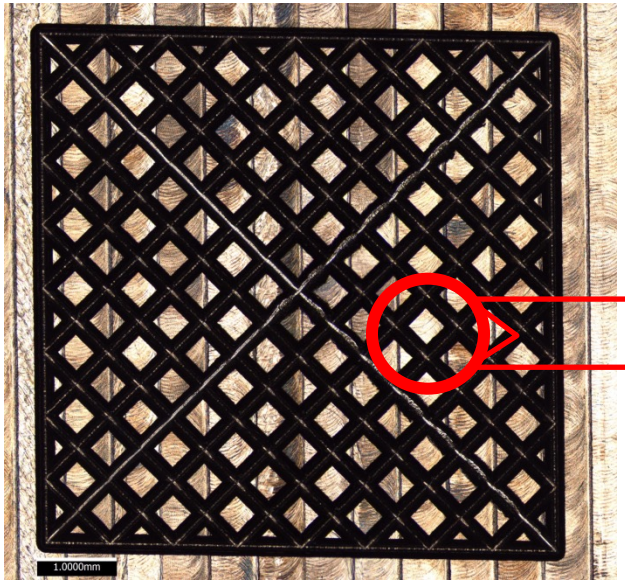

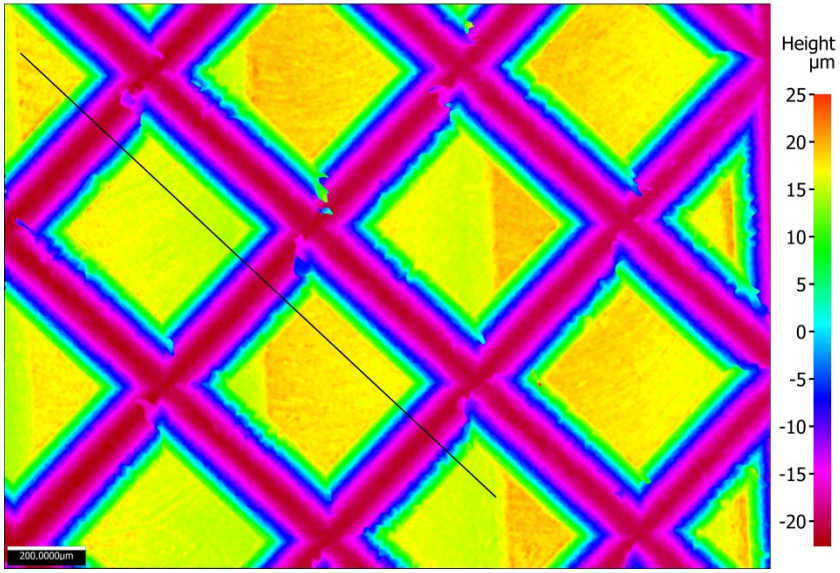

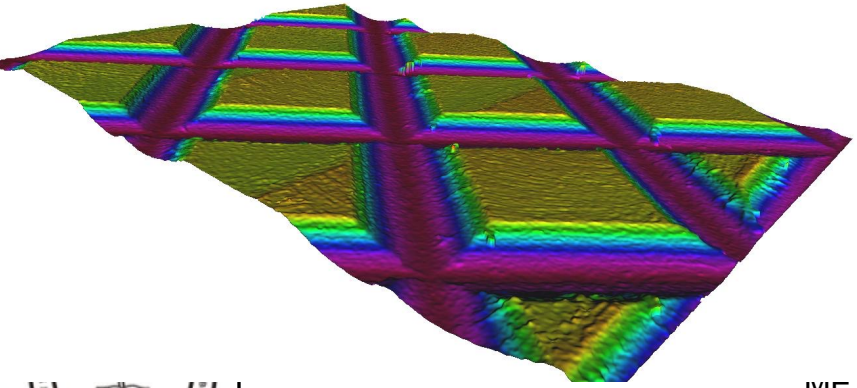

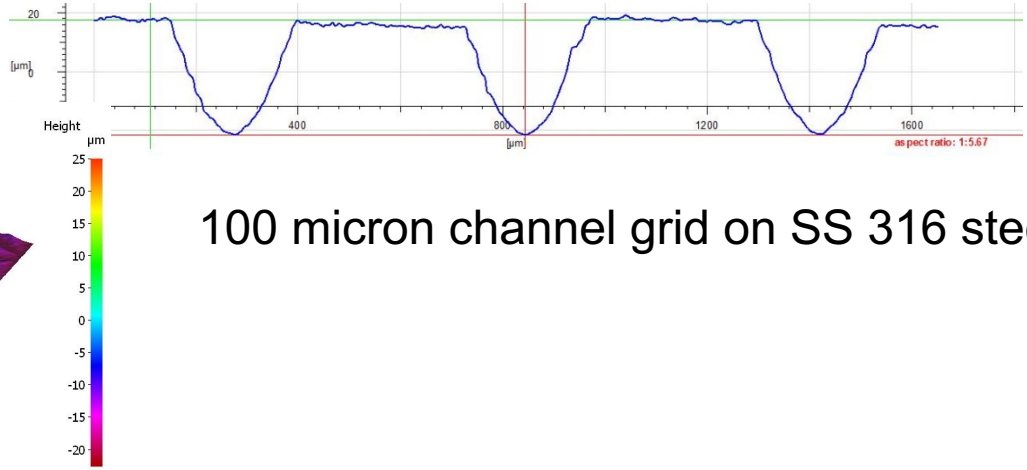

100 micron channel grid on SS 316 steel

3-D Feature Creation

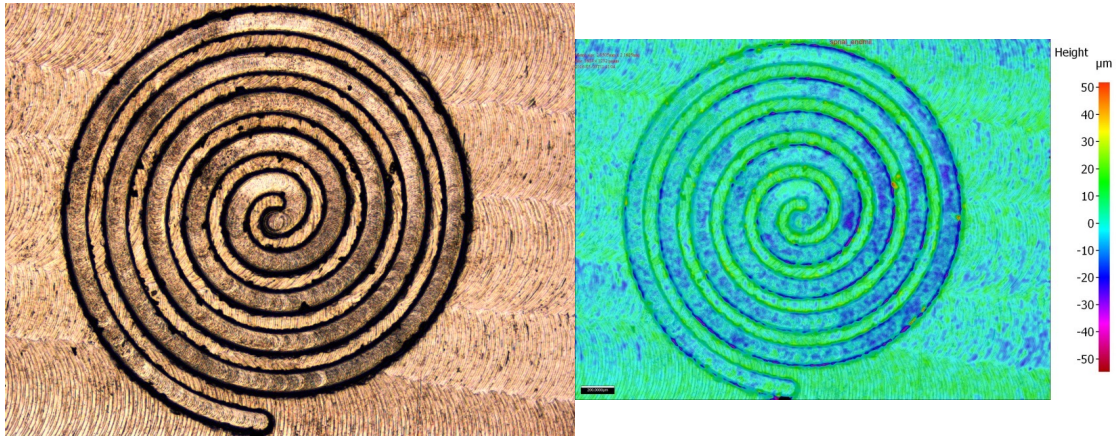

Spiral channel with flat end mill (tool 100 micron)

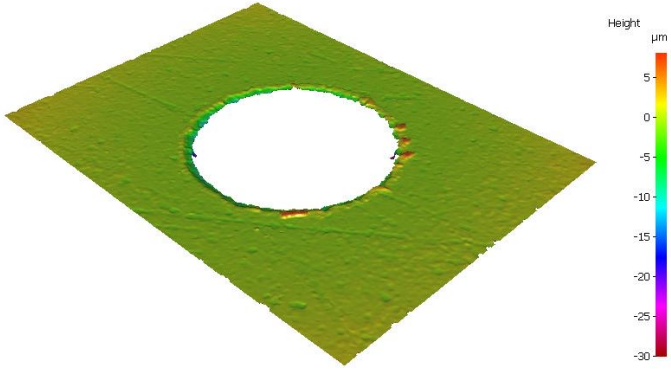

Micro-hole 100 microns

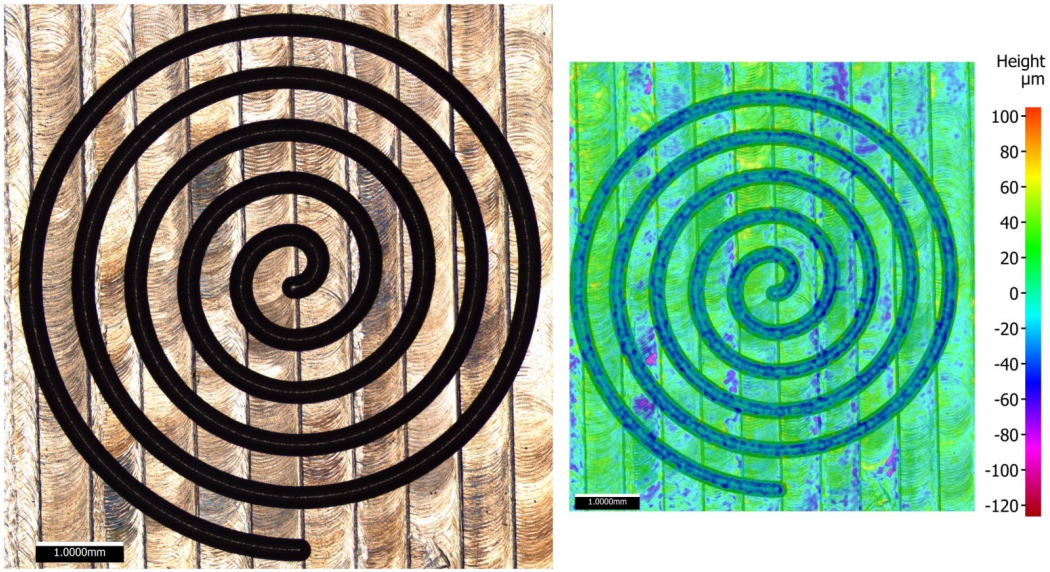

Spiral channel ball end mill (400 micron)

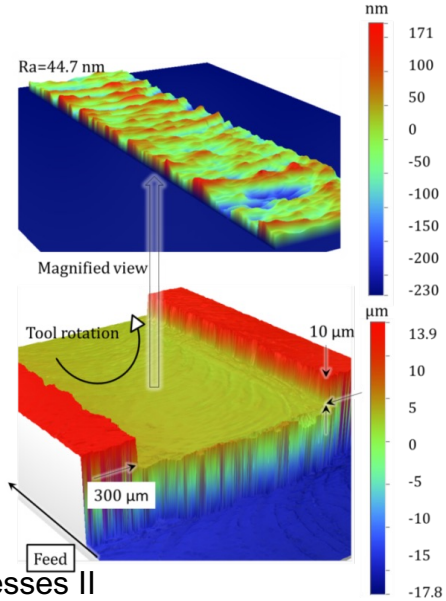

Machined micro-channel

Surface Roughness in High-speed Micromilling

3D surface morphology

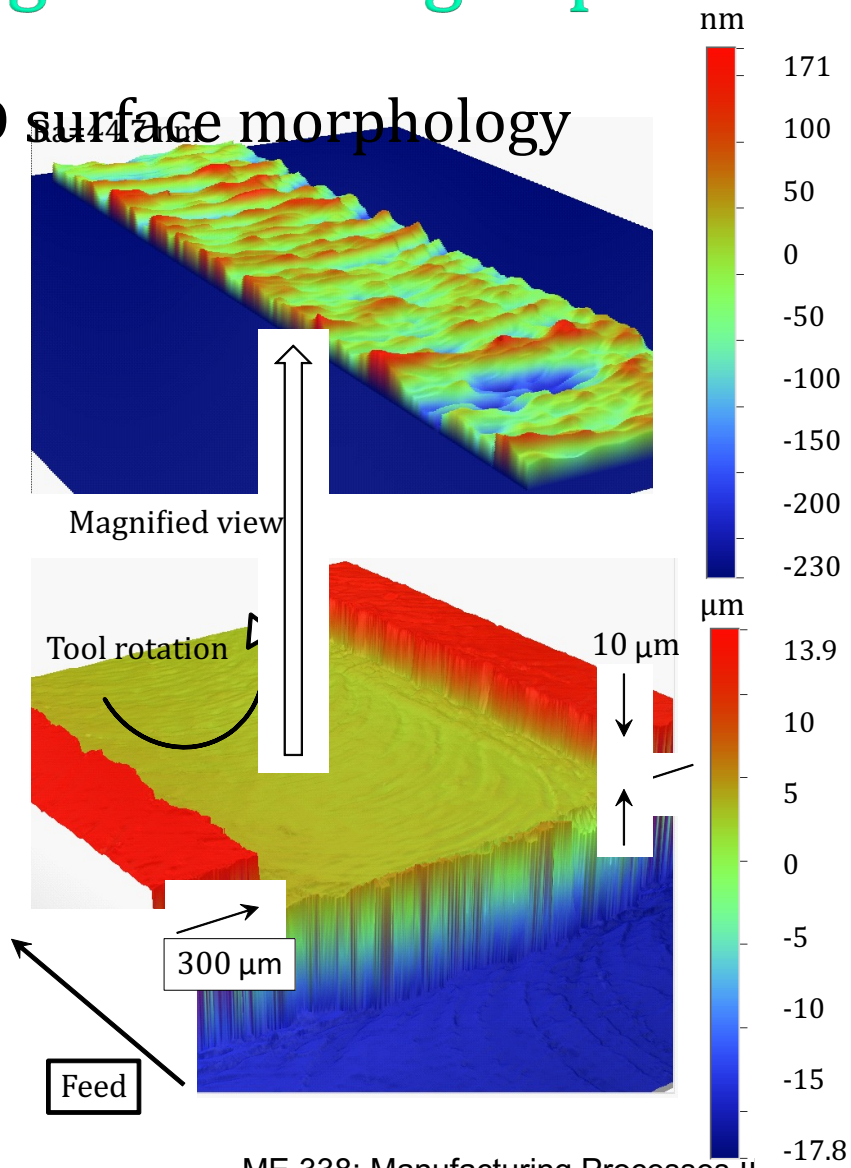

Micro-drilled Hole in Ti-6Al-4V

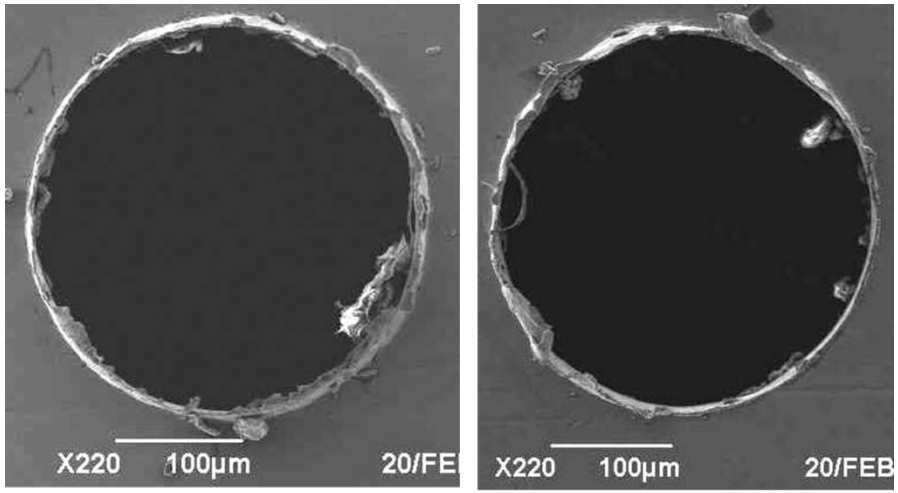

(a) (b)

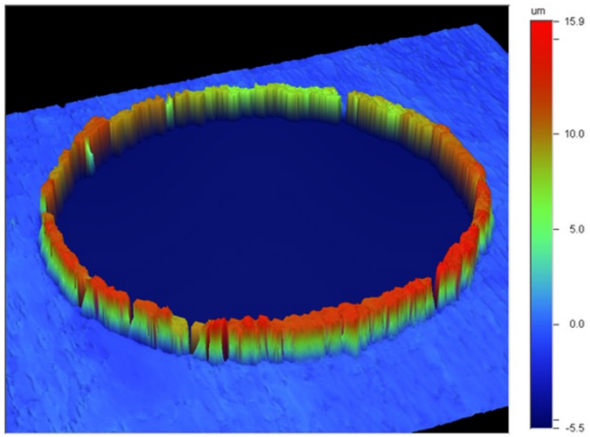

White light interferometer image

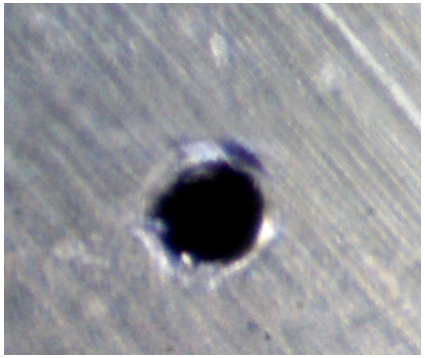

Optical micrograph

Broach

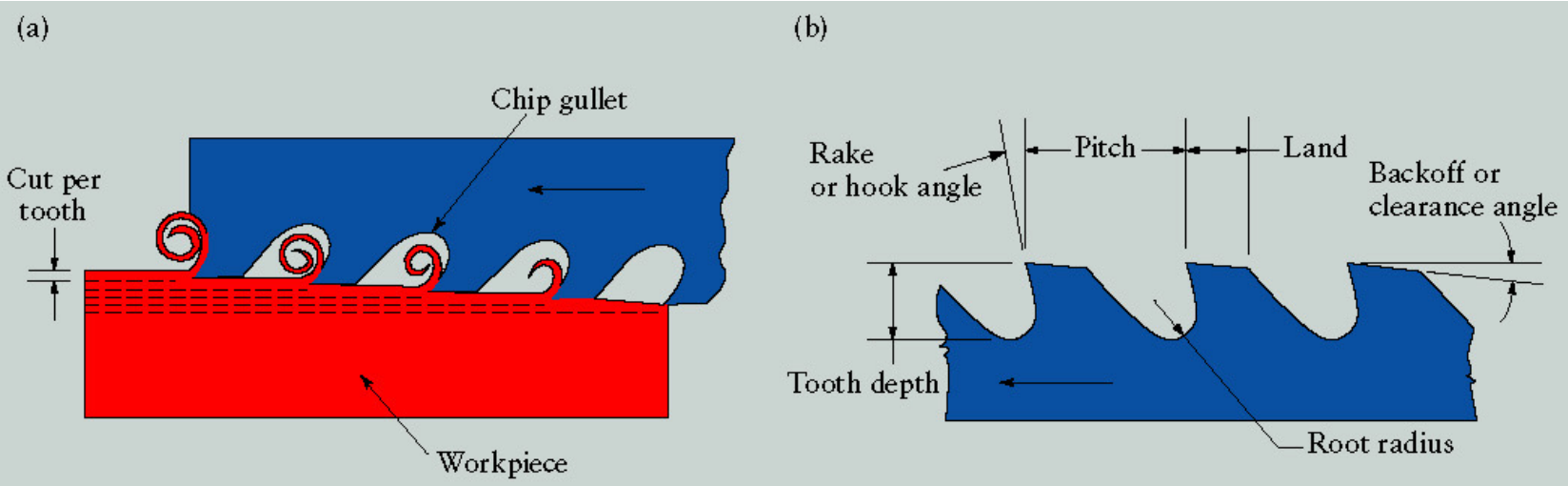
(a)
Chip gullet
Cut per tooth
Workpiece
(b)
Rake or hook angle
Pitch
Land
Backoff or clearance angle
Tooth depth
Root radius

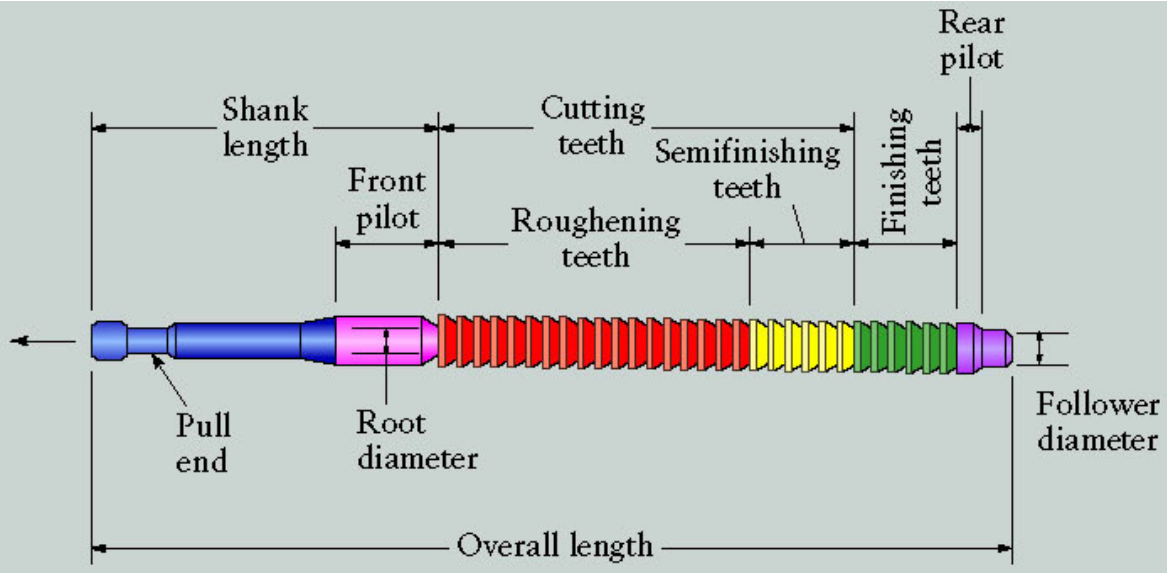
Rear pilot
Shank length
Cutting teeth
Semifinishing teeth
Finishing teeth
Front pilot
Roughening teeth
Pull end
Root diameter
Follower diameter
Overall length

Reamers

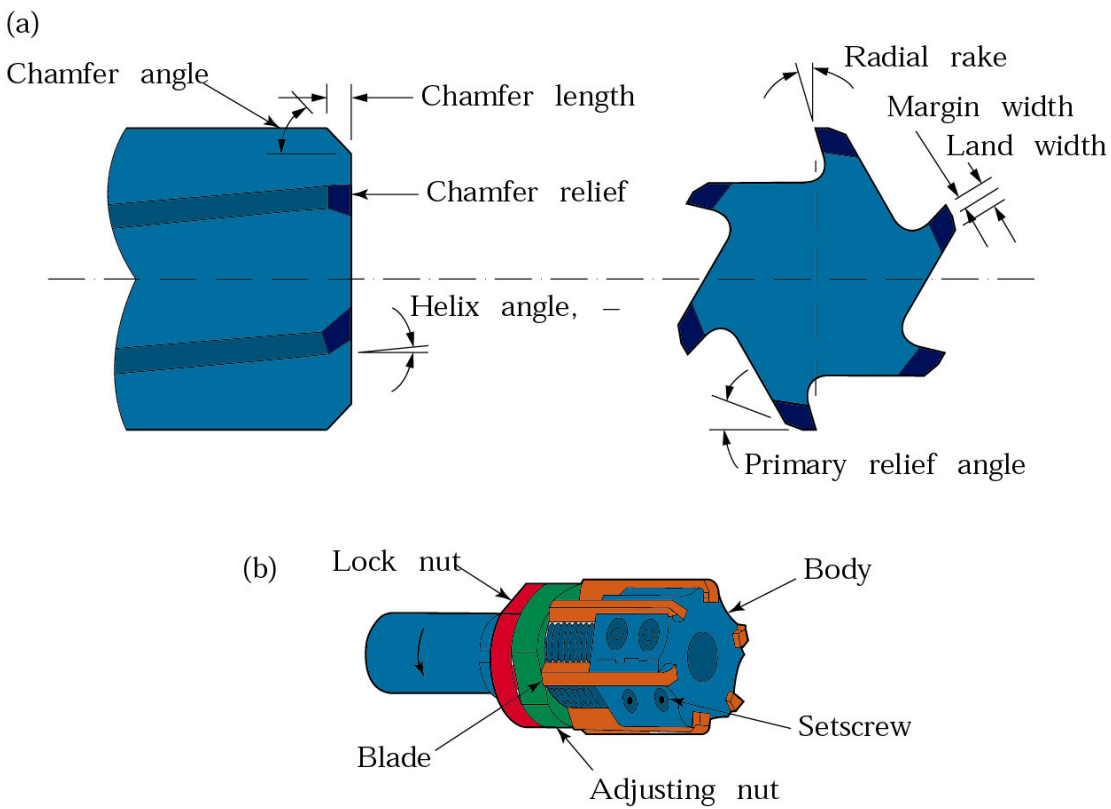

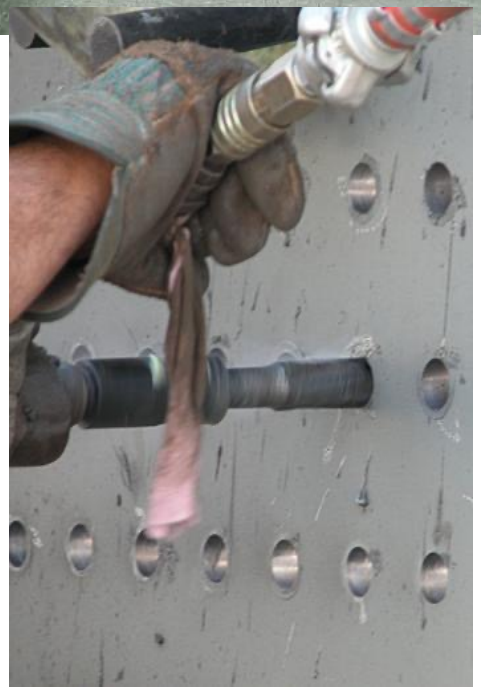

bridge reamer

Honing

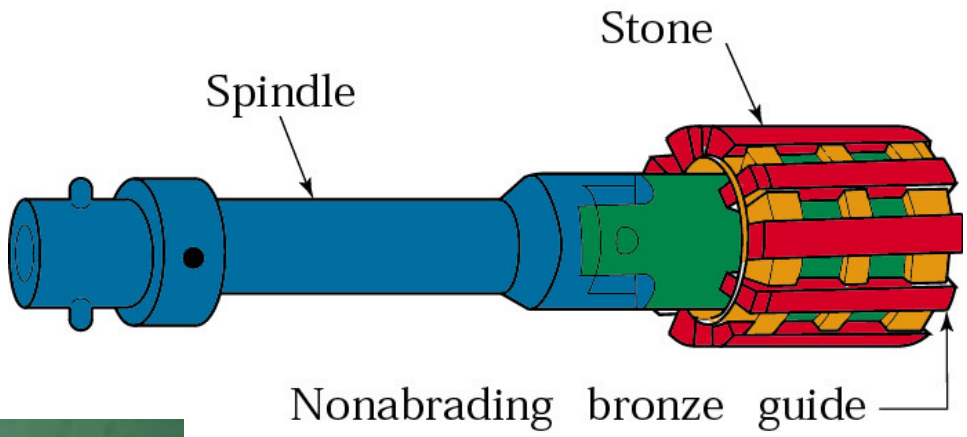

Thread Tap and Die

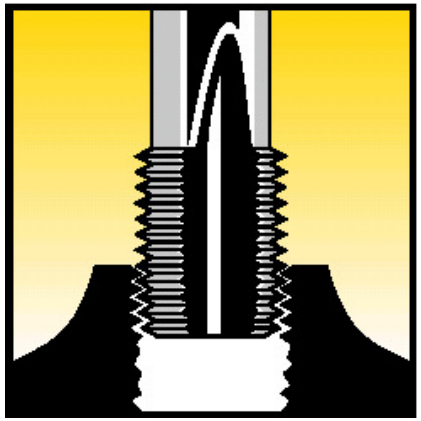

internal

external

Shaping

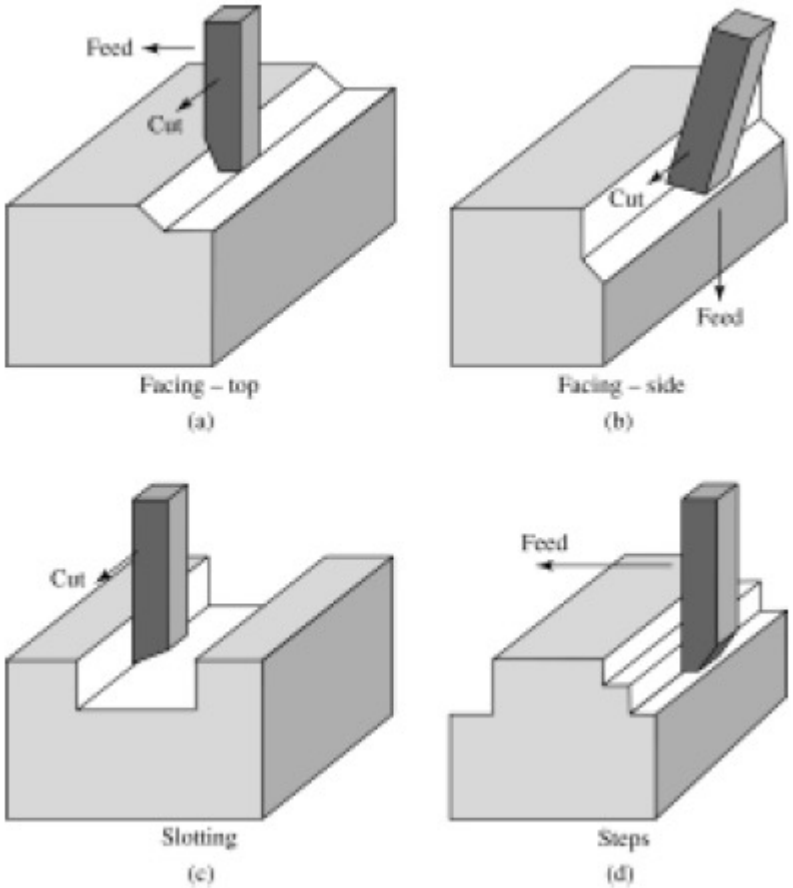
Feed
Cut
Facing – top
(a)
Cut
Feed
Facing – side
(b)
Cut
Slotting
(c)
Feed
Steps
(d)

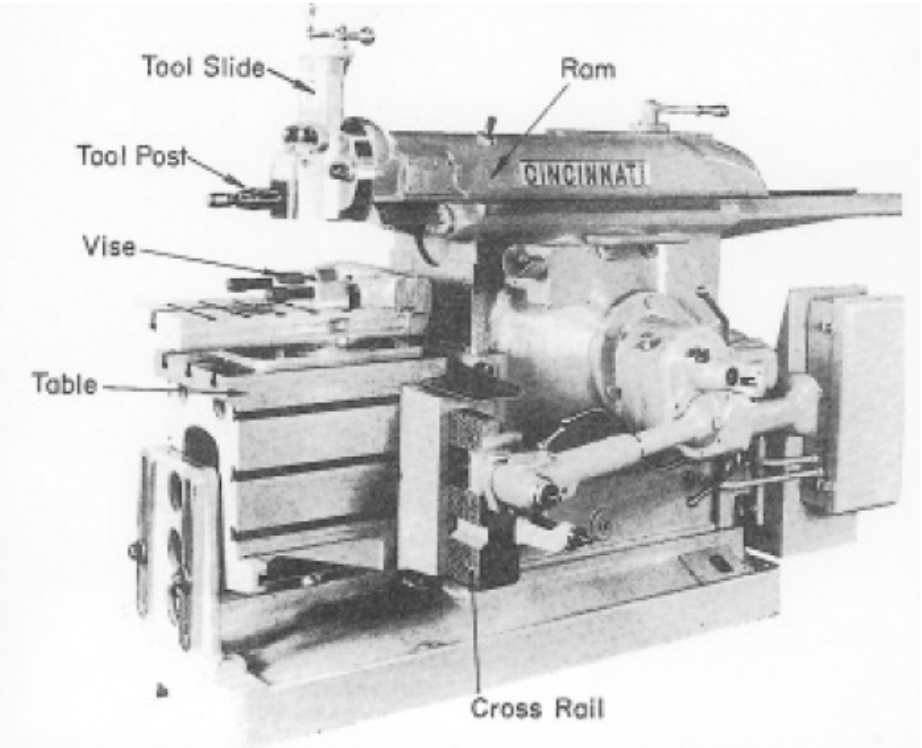
Tool Slide
Ram
Tool Post
CINCINNATI
Vise
Table
Cross Rail

Planing

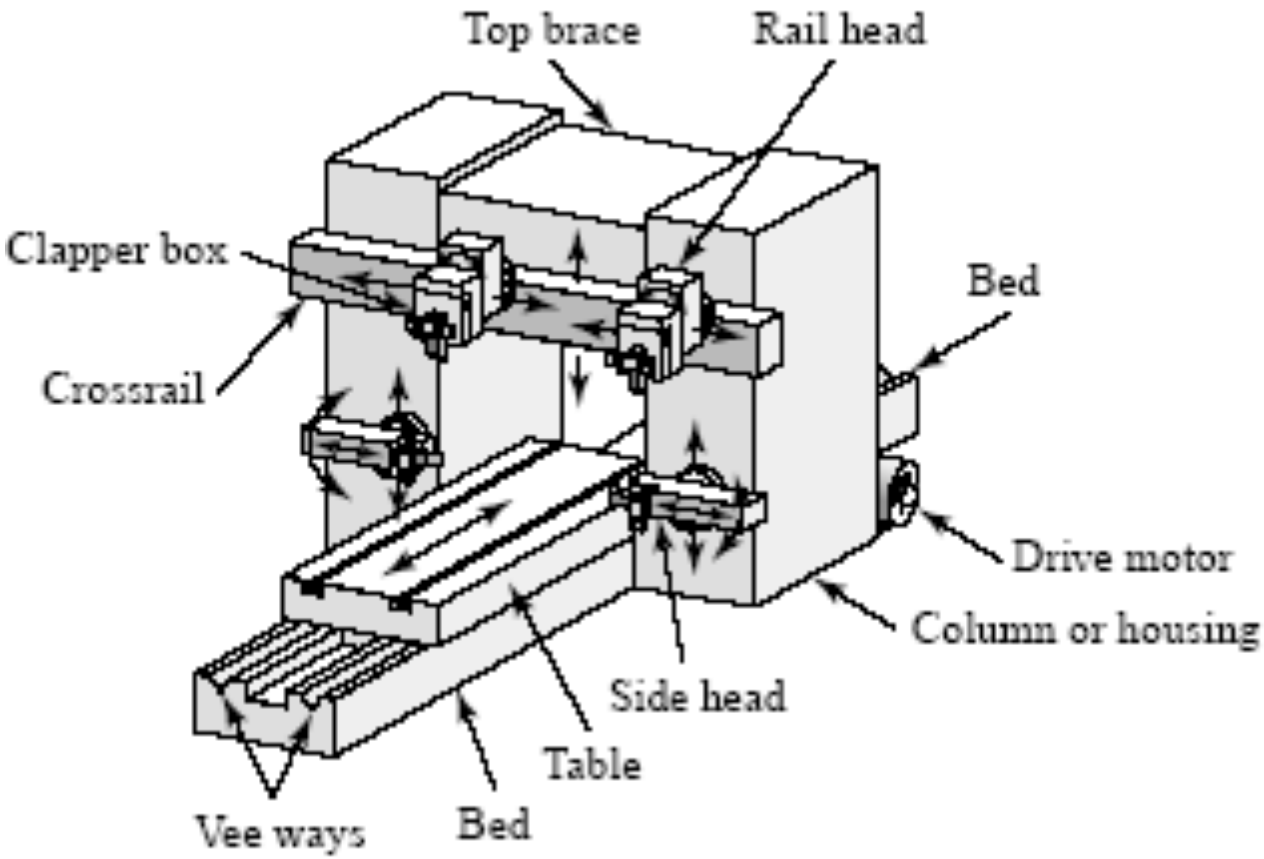
Top brace
Rail head
Clapper box
Bed
Crossrail
Drive motor
Column or housing
Side head
Table
Vee ways
Bed

Shaping & Planing

- Material removal rate, $MRR = Vwt_0$
- Cutting power, $P_c = u_c MRR$
- Machining time, $t_m = L/V$
  - L is the length of cut

u is composed of:

- u_s, the shear energy per unit volume
- u_f, frictional energy per unit volume
- chip curl energy
- chip acceleration kinetic energy
- surface energy of new surfaces

Where does cutting energy go?

- 90% to chip
- 5% to tool
- 5% to workpiece

u can be obtained in two ways

- Tabulated
- Estimated
  - u ~ HB

Cutting Energy (u)

As a first approximation:

$$u \approx u_s + u_f$$

$$u_s \approx 0.75 - 0.8\ u$$

hence

$$u \approx 1.5\ u_s$$

Estimation of u

- Assume a simple, rigid-perfectly plastic material:

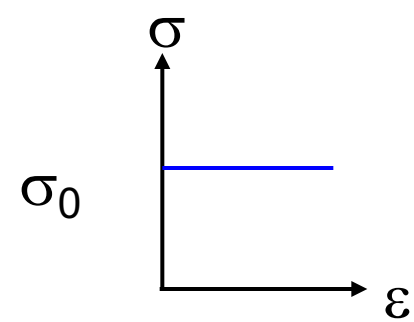

$$u_s = \int \sigma \cdot d\varepsilon = \sigma_o \cdot \varepsilon = \tau_{fm} \cdot \gamma$$

$$\sigma_o \approx \frac{HB}{3}$$ for heavily cold-worked metals

$$\varepsilon \approx 1 - 2 \Rightarrow \gamma \approx 2 - 4$$

Estimation of u

$$\tau_{fm} \approx \frac{\sigma_o}{2} \approx \frac{1}{6} HB$$

$$u_s \approx \frac{1}{3} HB \rightarrow \frac{2}{3} HB$$

What number to use?

From above

$u \approx 1.5\ u_s$

$u_s \approx (1/3 \text{ to } 2/3)\ HB$

$u \approx (1/2 \text{ to } 1)\ HB$

so, if no data, $u \approx HB$

Comparison of Tensile and Cutting (Ex. 1-1)

- 304 stainless steel rod
- d_o = 0.5 in, d_f = 0.48 in, l_o = 6 in

- What is the energy required using tension?
- What is the energy required using cutting?

K = 185,000 psi; n = 0.45

U = 1.5 hp min/in^3

Tension: Ex. 1-2

$$\int \sigma \cdot d\varepsilon_1 = u = \frac{K \cdot \varepsilon_1^{n+1}}{n+1}$$

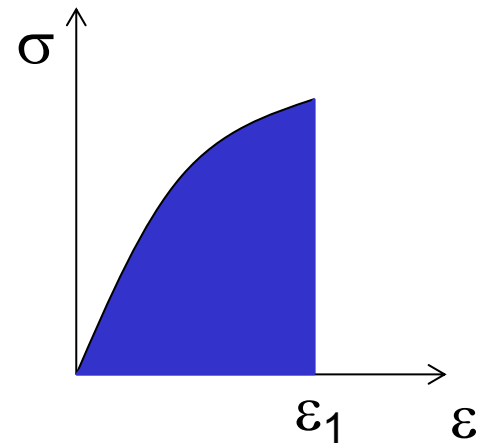

$$u \times volume = Energy$$

K = 185,000 psi; n = 0.45

Tension - Ex. 1-3

$$\varepsilon_1 = 2\ln\left(\frac{0.5}{0.48}\right) = 0.0816$$

$$Energy = \frac{K \cdot \varepsilon_1^{n+1}}{n+1} A_o l_o$$

$$= \frac{(185{,}000)\cdot(0.0816)^{1.45}}{1.45}\pi(0.25)^2(6)$$

$$= 3{,}970\ in - lbf = 449\ J$$

Cutting - Ex. 1-4

Energy = (specific cutting energy) * (volume removed)

$$E = u \times \frac{\pi}{4}\left(D_i^2 - D_f^2\right) \cdot l$$

$u_{ss} \approx 1.5$ hp min/in^3 x 550 x 60 x 12

= 594,000 in-lbf/in^3

$$E = 594{,}000 \times \frac{\pi}{4}\left(0.5^2 - 0.48^2\right) \cdot 6$$

= 54,650 in-lbf (6,176 J)

Relation between u and t_0

- As the depth of cut decreases, the surface area to volume ratio increases, hence friction (energy) increases
- Since

$$u \approx u_s + u_f$$

- Hence

$$u \propto \frac{1}{t_0}$$

Turning -MRR

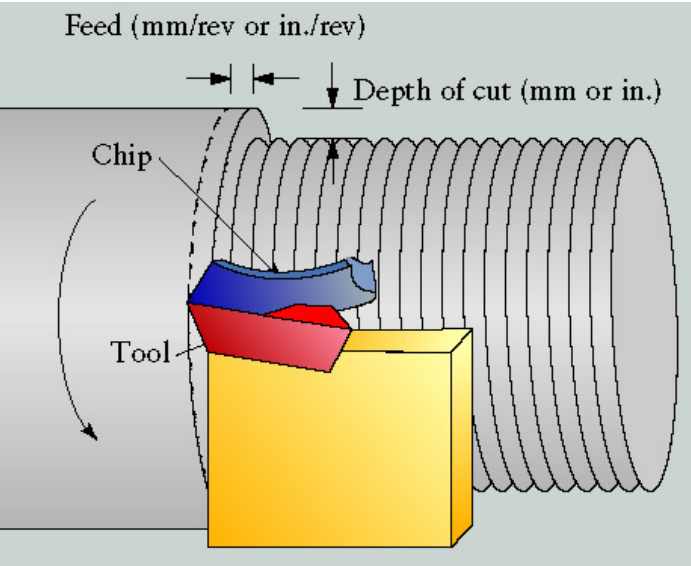
Feed (mm/rev or in./rev)
Depth of cut (mm or in.)
Chip
Tool

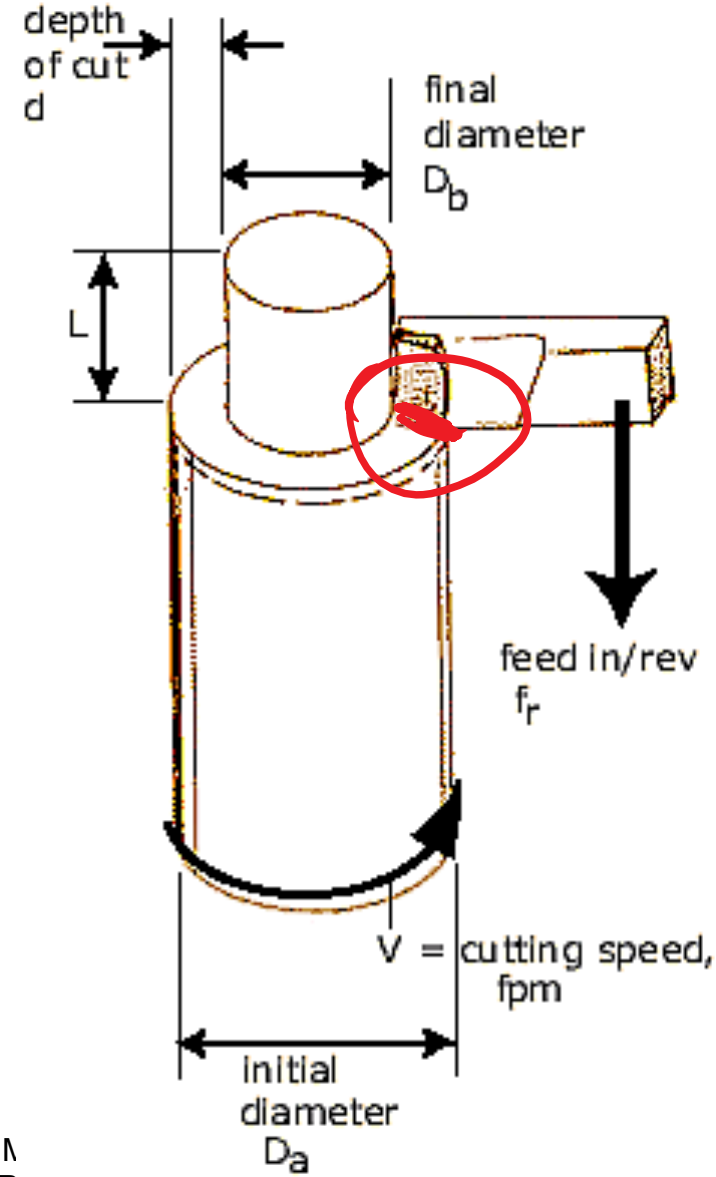
depth of cut d
final diameter D_b
L
feed in/rev f_r
V = cutting speed, fpm
initial diameter D_a

to
CHIP
TOOL

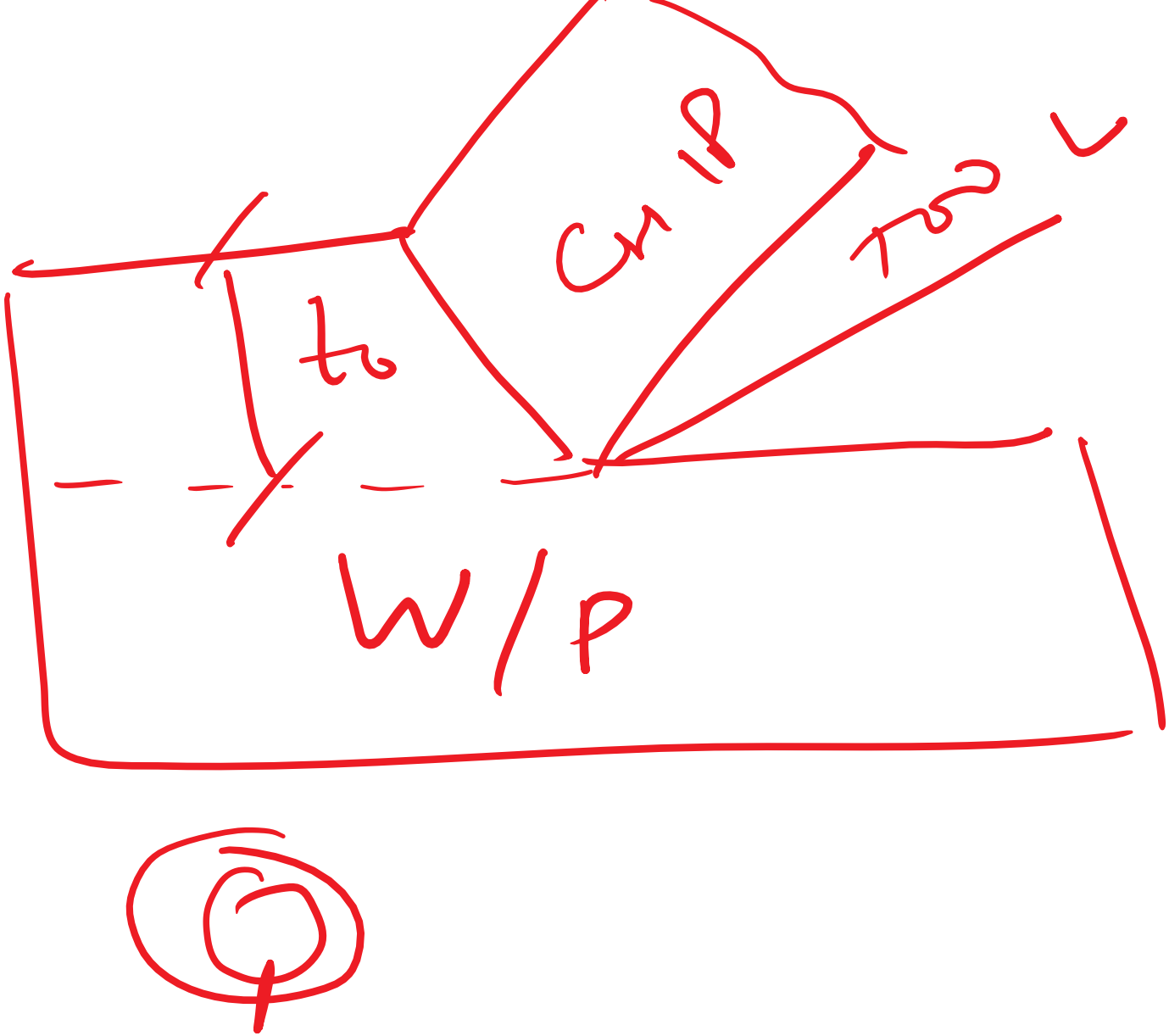
Chip
Tool
t_0
W/P

Turning

- Average cutting speed, $V_{avg} = \pi D_{avg} N$
  - D_{avg} is the average diameter of workpiece
  - N is the spindle speed in rpm
- Material removal rate, $MRR = V_{avg} d f$
  - d is the depth of cut
  - f is the feed (units: mm/rev or in/rev)
- Cutting power, $P_c = u_c MRR = F_c V$
  - F_c=Cutting force
  - V = Cutting speed
- Machining time, $t_m = L/(fN) = L/F$
  - F is the feed rate (units: mm/min or in/min)

Turning Power and Force- Ex. 2-1

Turning Titanium:

- speed = 1 m/s = 200 sfpm
- feed rate = 0.1 mm/rev = 0.0004” / rev
- depth of cut = 3 mm = 0.1”

What is cutting power and cutting force?

Power - Ex. 2-2

$u \approx 0.06\ kW/cm^3/min = 3.6\ W/mm^3/sec$

$MRR = Q = Vfd = 1{,}000 \times 0.1 \times 3$

$= 300\ mm^3/sec$

$P = u \times MRR = 3.6 \times 300 = 1{,}080\ W$

$= 1.45\ hp$

Force - Ex. 2-3

$F = P/V = 1{,}080\ W \div 1\ m/s$

$= 1{,}080\ N\ (243\ lbf)$

Milling

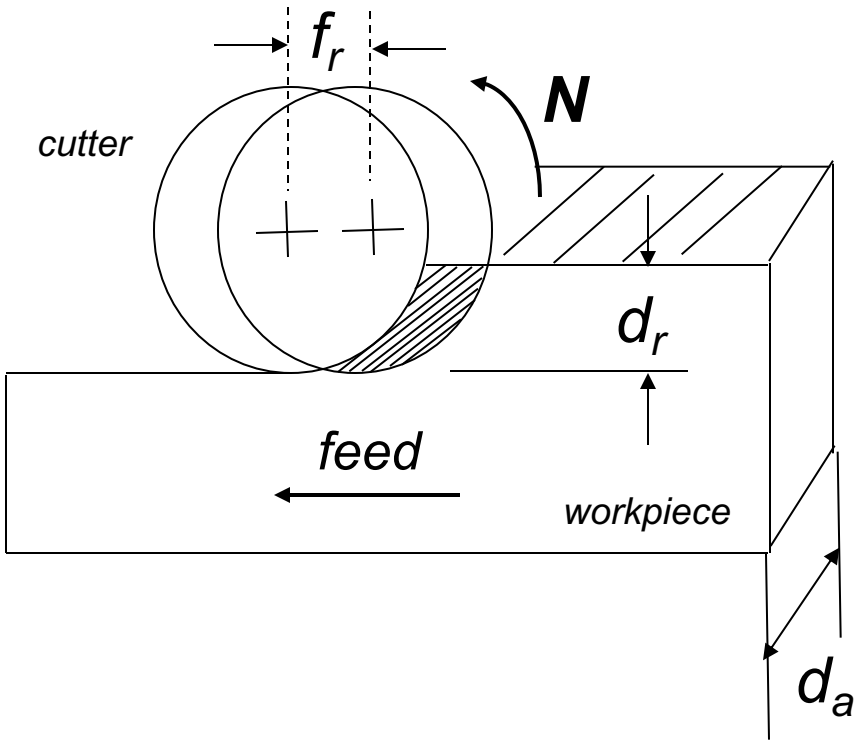

Milling Modes

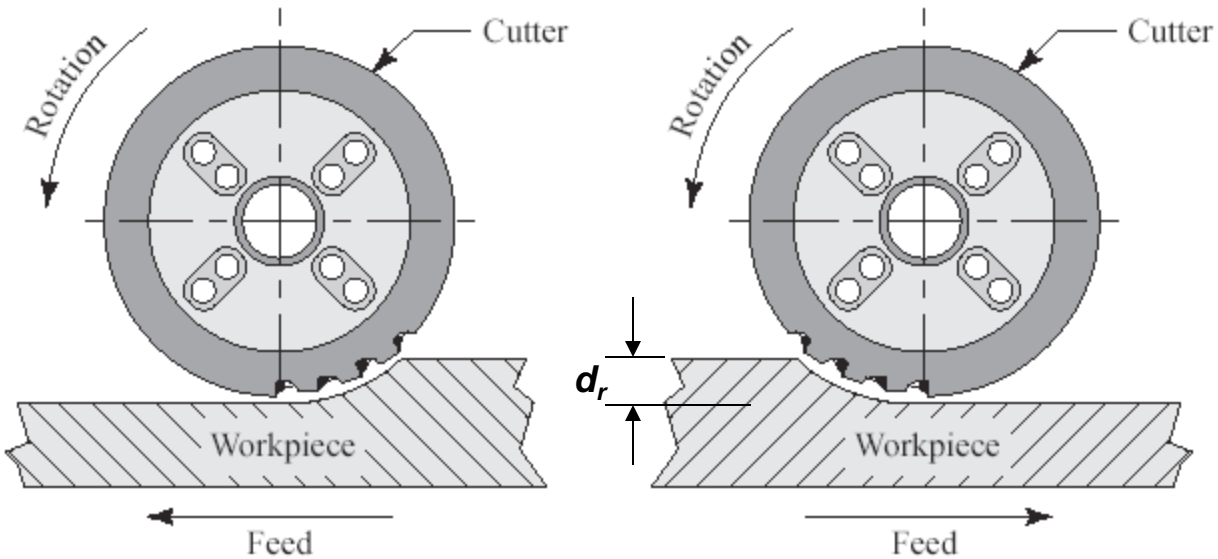

Up Milling ***Down Milling***

$$t_c = f_t \sin\theta - \frac{N}{2\pi R} f_t^2 \sin\theta \cos\theta + \frac{1}{2R} f_t^2 \cos^2\theta$$

Where ft is feed/tooth/rev and θ is immersion angle

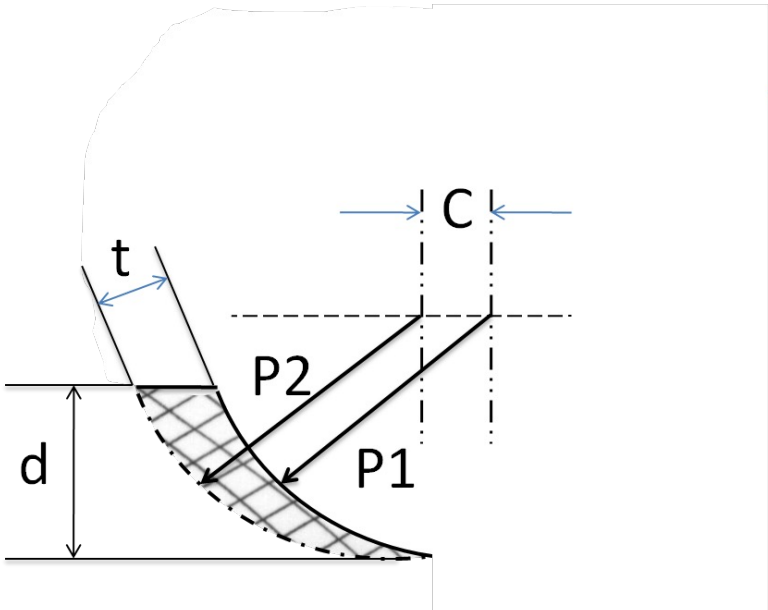

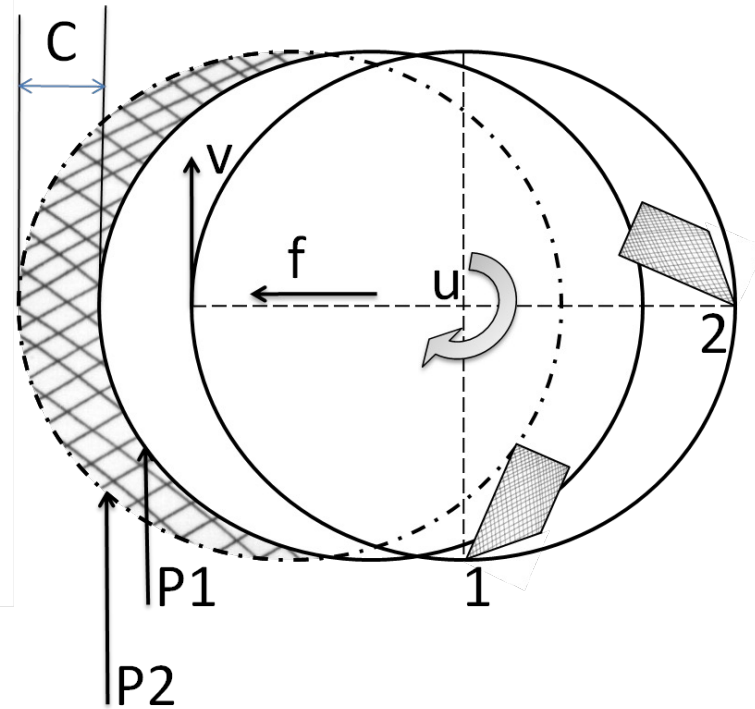

Milling

- Cutting speed, $V = \pi DN$
  - D is the cutter diameter

- Material removal rate, $MRR = fNd_a d_r = Fd_a d_r$
  - d_a is the axial depth of cut
  - d_r is the radial depth of cut
  - f is the feed per revolution (= $f_t N_t$; f_t is the feed per cutting edge/tooth and N_t is the number of teeth)
  - F is the feed rate (in/min or mm/min)

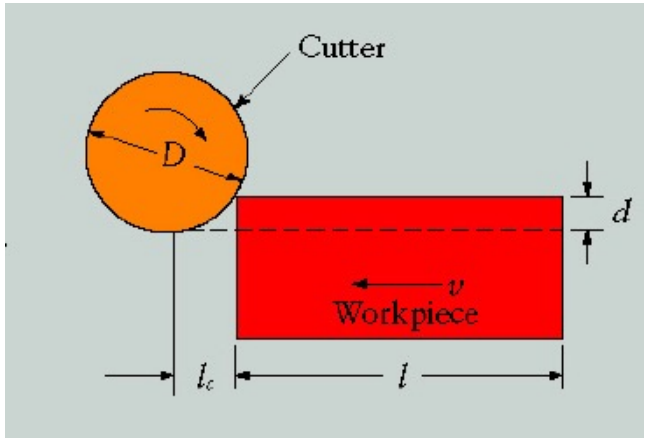

- Cutting power, $P_c = u_c MRR$

- Machining time, $t_m = (L + l_c)/F$
  - l_c is the length of the cutter's first contact with the workpiece

Example

- A slab-milling operation is being carried out on a 25-in. long, 4-in. wide metal block (u = 4.3 hp-min/in^3) at a feed of 0.02 in./tooth and a depth of cut of 0.125 in. The cutter has a diameter of 4 in., has eight straight cutting teeth, is 2 inches wide and rotates at 200 rpm. Calculate the material removal rate, the cutting time, and the power required.

$d_a =$

$d_r =$

$f_t =$

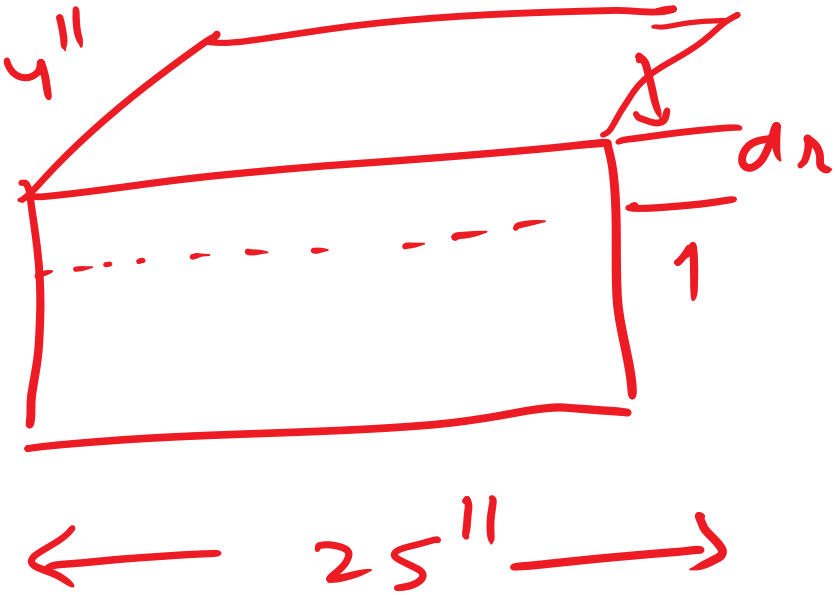

$$f = f_t \cdot N_t$$

$$F = f \cdot N$$

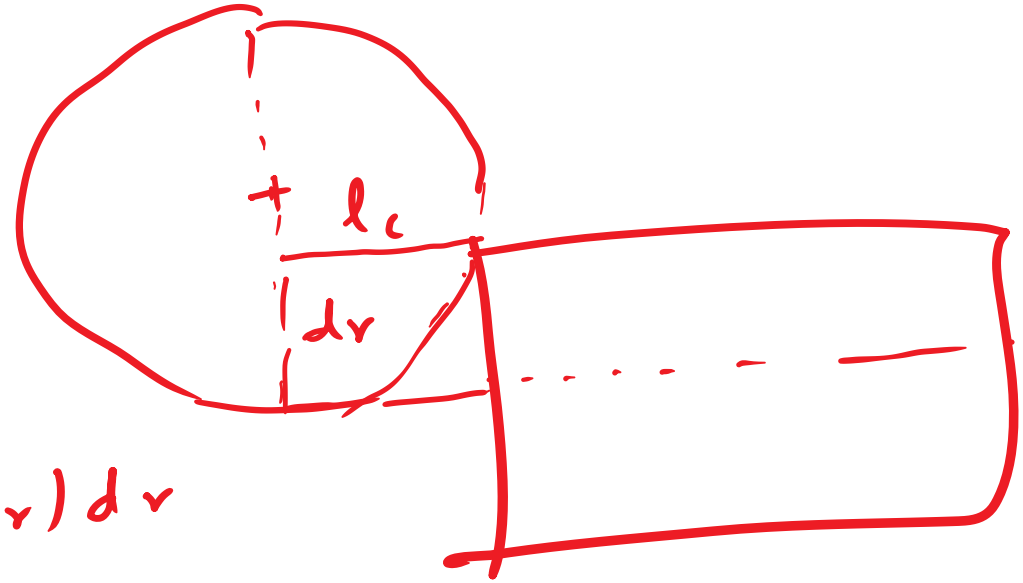

$$l_c^2 = (D - d_r)\, d_r$$

Summary

- General Machining Process
- Shaping & planing
- Turning
- Milling